OKLAHOMA DEPARTMENT OF TRANSPORTATION	
STANDARD REVISIONS	
DESCRIPTION	DATE

FULL CIRCLE STEEL PIPE CULVERT

PIPE DIAMETER FOR CORRUGATION PATTERN				MIN. COVER	MAXIMUM FILL HEIGHT ABOVE TOP OF PIPE						
					EQUIV. STANDARD GAGE						
2 2/3" x 1/2"	3" x 1"	5" x 1"	6" x 2"	TOP OF PIPE TO TOP OF SUBGRADE	16	14	12	10	8	7	5
18"				12"	61'	67'	86'	90'	94'		
21"				12"	53'	57'	74'	77'	81'		
24"				12"	46'	50'	65'	68'	71'		
27"				12"	41'	44'	57'	60'	63'		
30"				12"	37'	40'	52'	54'	56'		
36"				12"	30'	33'	43'	45'	47'		
	36"			12"	53'	66'	77'	89'	100'		
42"				12"	34'	44'	46'	47'	49'		
	42"			12"	45'	56'	64'	71'	78'		
48"				12"		41'	44'	45'	46'		
	48"			12"	39'	49'	56'	61'	66'		
		48"		12"	49'	52'	56'	61'	66'		
54"				12"		36'	43'	44'	45'		
	54"			12"	35'	44'	51'	55'	58'		
		54"		12"	47'	48'	52'	55'	58'		
60"				12"			42'	43'	43'		
	60"			12"	31'	39'	49'	51'	53'		
		60"		12"	43'	46'	49'	51'	53'		
			60"	12"			46'	68'	90'	96'	106'
66"				12"				42'	43'		
	66"			12"	29'	36'	47'	48'	50'		
		66"		12"	39'	45'	47'	48'	50'		
			66"	12"			42'	62'	78'	82'	90'
72"				12"				42'	42'		
	72"			12"	26'	33'	45'	47'	48'		
		72"		12"	36'	44'	45'	47'	48'	73'	78'
			72"	12"			38'	57'	69'		
78"				12"					42'		
	78"			12"	24'	30'	44'	45'	46'		
		78"		12"	33'	42'	44'	45'	46'		
			78"	12"			35'	53'	63'	66'	70'
84"				12"					42'		
	84"			12"	22'	28'	42'	44'	45'		
		84"		12"	31'	39'	43'	44'	45'		
			84"	12"			33'	49'	59'	61'	64'
	90"			12"		26'	39'	44'	44'		
		90"		12"	29'	36'	43'	44'	44'		
			90"	12"			31'	45'	55'	57'	60'
	96"			12"		24'	36'	43'	44'		
		96"		12"		34'	43'	43'	44'		
			96"	12"			29'	43'	53'	54'	57'
	102"			24"			34'	41'	43'		
		102"		24"		32'	42'	43'	43'		
	108"			24"			32'	39'	43'		
		108"		24"			42'	42'	43'		
			108"	24"			25'	38'	49'	50'	52'
	114"			24"			31'	37'	41'		
		114"		24"			40'	42'	42'		
	120"			24"			29'	35'	39'		
		120"		24"			38'	42'	42'		
			120"	24"			23'	34'	45'	48'	49'

FULL CIRCLE ALUMINUM PIPE CULVERT

PIPE DIAMETER FOR CORRUGATION PATTERN			MIN. COVER	MAXIMUM FILL HEIGHT ABOVE TOP OF PIPE				
				EQUIV. STANDARD GAGE				
2 2/3" x 1/2"	3" x 1"	6" x 1"	TOP OF PIPE TO TOP OF SUBGRADE	16	14	12	10	8
18"			12"	36'	36'	63'		
24"			12"	27'	27'	47'	50'	
27"			12"	24'	24'	42'	44'	
30"			12"	22'	21'	37'	39'	
	30"		12"	40'	50'	68'		
36"			12"		18'	32'	33'	
	36"		12"	33'	41'	57'	85'	
		36"	12"	20'				
42"			12"			54'	57'	
	42"		12"	27'	35'	48'	73'	
48"			12"			47'	49'	51'
	48"		12"	24'	30'	42'	63'	82'
54"			12"			41'	44'	45'
	54"		12"	21'	27'	37'	56'	73'
		54"	12"		29'	42'	67'	66'
60"			12"				39'	41'
	60"		12"	19'	24'	33'	24'	66'
		60"	12"		25'	37'	59'	58'
66"			12"				36'	37'
	66"		12"	14'	18'	26'	40'	51'
		66"	12"		23'	33'	53'	52'
	72"		12"		28'	27'	41'	54'
		72"	15"		19'	27'	36'	43'
	78"		15"		18'	25'	38'	50'
		78"	15"		17'	25'	32'	40'
	84"		18"		17'	23'	35'	47'
		84"	18"			23'	30'	37'
	90"		18"			21'	33'	43'
		90"	18"			21'	28'	34'
	96"		18"			20'	31'	40'
		96"	18"			19'	26'	32'
	102"		21"			18'	28'	37'
		102"	21"			18'	25'	29'
	108"		21"				27'	35'
		108"	21"			17'	23'	28'
	114"		24"				25'	34'
		114"	24"			16'	21'	26'
	120"		24"				24'	32'
		120"	24"				20'	25'

METAL PIPE ARCH - FILLS TO 10 FT. MAX.

APPROX. EQUIV. ROUND PIPE	SIZE SPAN x RISE	2 2/3" x 1/2" CORRUGATION PATTERN			
		STEEL		ALUMINUM	
		MIN. GAGE	MIN. COVER	MIN. GAGE	MIN. COVER
15"	17" x 13"	16	12"	16	12"
18"	21" x 15"	16	12"	16	12"
21"	24" x 18"	16	12"	16	12"
24"	28" x 20"	16	12"	14	12"
30"	35" x 24"	14◒	12"	14	12"
36"	42" x 29"	14	12"	12	15"
42"	49" x 33"	14	12"	12	15"
48"	57" x 38"	12	12"	10	15"
54"	64" x 43"	12	12"	10	18"
60"	71" x 47"	10	12"	8	18"
66"	77" x 52"	8	12"	8	18"
72"	83" x 57"	8	12"	8	18"
3" x 1" & 5" x 1" CORRUGATION PATTERN					
36"	40" x 31"	14	12"		
42"	46" x 36"	14	12"		
48"	53" x 41"	14	12"		
54"	60" x 46"	14	12"	14	15"
60"	66" x 51"	14	12"	14	18"
66"	73" x 55"	14	12"	14	18"
72"	81" x 59"	14	12"	12	21"
78"	87" x 63"	14	12"	12	21"
84"	95" x 67"	12	12"	12	24"
90"	103" x 71"	12	18"	10	24"
96"	112" x 75"	12	18"	10	27"
102"	117" x 79"	12	18"		
108"	128" x 83"	10	24"		
114"	137" x 87"	10	24"		
120"	142" x 91"	10	24"		

◒ WHEN INSTALLED UNDER PAVEMENT INCLUDING ALL P.C. OR A.C. SURFACING UNDER MAINLINE TRAFFIC AND MAJOR STREET RETURNS. A MINIMUM PIPE GAGE OF 16 MAY BE USED FOR INSTALLATION REQUIRING 30 INCH EQUIVALENT ROUND CONDUITS (MAX.) AND LIMITED TO LOW VOLUME COUNTY OR OFF-SYSTEM ROADS, MINOR STREET RETURNS, DRIVEWAYS OR TEMPORARY DETOURS, AS APPROVED BY THE ENGINEER.

POLY-PROPYLENE PIPE DIAMETER	MAXIMUM FILL HEIGHT OVER CULVERT (FT.) ◑			
	UNDER PAVEMENT		OUTSIDE PAVEMENT	
	95% COMPACT	90% COMPACT	Class C - 85% COMPACT	Class D - 85% COMPACT
18	25	18	16	13
24	22	16	14	12
30	23	17	13	12
36	22	16	11	11
42	22	15	11	11
48	21	15	11	10
60	23	16	11	10

◑ REFER TO ROADWAY DESIGN STANDARD SPB-1 FOR MINIMUM FILL HEIGHT AND OTHER POLYPROPYLENE INSTALLATION DETAILS.

EQUIVALENT METAL THICKNESS AND GAGE		
GAGE NUMBER	METAL THICKNESS (INCHES)	
	■ STEEL	♦ ALUMINUM
16	0.064	0.060
14	0.079	0.075
12	0.109	0.105
10	0.138	0.135
8	0.168	0.164
7	0.188	----
5	0.218	----

■ THE THICKNESS OF THE SHEET INCLUDES BOTH THE BASE STEEL AND THE COATING.

♦ THE THICKNESS SHOWN REFERS TO THE CLAD SHEET.

GENERAL NOTES

1. METAL PIPE FILL HEIGHT DESIGNS ARE BASED ON A CLASS B BEDDING, NEGATIVE PROJECTION, HS-20 LIVE LOADING AND 120 LBS/C.F. SOIL WEIGHT. POLYPROPYLENE PIPE FILL HEIGHTS ARE BASED ON AASHTO M330 FOR POLYPROPYLENE, TYPE S, PIPE WITH OUTER CORRUGATED WALL AND SMOOTH INNER WALL.
2. IN THE EVENT LOADS IN EXCESS OF HS-20 ARE TO BE OPERATED OVER OR ADJACENT TO THE PIPE INSTALLATION DURING THE CONSTRUCTION PHASE, THE CONTRACTOR SHALL PROVIDE AND MAINTAIN A MINIMUM OF FOUR FEET OF COVER OVER THE PIPE AT WHEEL OR TRACK PATHS.
3. PROPER INSTALLATION PRACTICES MUST BE ADHERED TO AS SHOWN ON ROADWAY STANDARDS SPI-4, FPI-3 AND SPB-1. POLYPROPYLENE PIPE SHALL BE INSTALLED IN ACCORDANCE WITH ASTM D2321.
4. ANY PIPE DEFORMED PRIOR TO FINAL ACCEPTANCE SHALL BE REPLACED BY THE CONTRACTOR AT HIS EXPENSE. SURFACE DISTRESS MUST BE REPAIRED TO THE SATISFACTION OF THE ENGINEER OR REPLACED AT THE CONTRACTOR'S EXPENSE.
5. MAXIMUM FILL HEIGHTS ARE MEASURED TO TOP OF SUBGRADE (OR BOTTOM OF ASPHALT OR PC PAVEMENT) FOR METAL AND POLYPROPYLENE PIPES.

APPROVED BY ROADWAY ENGINEER: Caleb F. H DATE: 04/16/15

ROADWAY DESIGN DIVISION STANDARD

FILL HEIGHT TABLES (METAL & POLYPROPYLENE PIPES)

OKLAHOMA DEPARTMENT OF TRANSPORTATION
2009 SPECIFICATIONS

FHTMPP-1	0
	R-50

OKLAHOMA DEPARTMENT OF TRANSPORTATION	
STANDARD REVISIONS	
DESCRIPTION	DATE

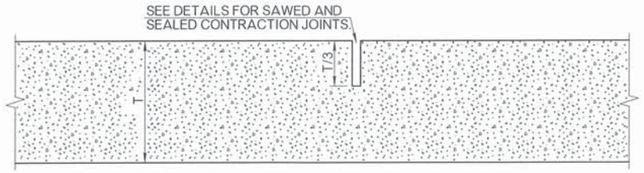

NON-DOWELED CONTRACTION JOINT

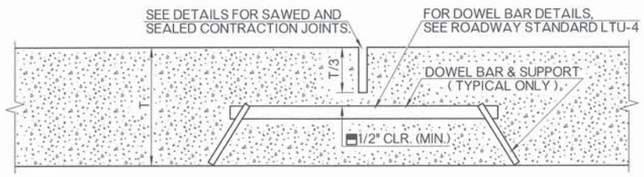

◒DOWELED CONTRACTION JOINT

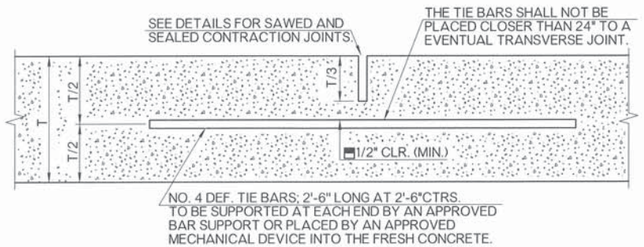

LONGITUDINAL JOINT

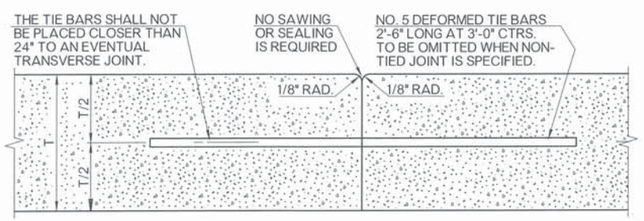

TIED BUTT JOINT AND
LONGITUDINAL CONSTRUCTION JOINT

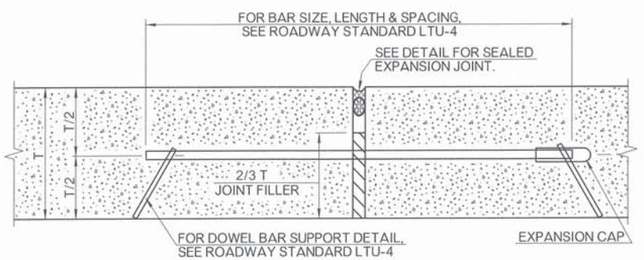

EXPANSION JOINT / ISOLATION JOINT
OMIT DOWEL BARS, CAPS & SUPPORTS FOR ISOLATION JOINTS

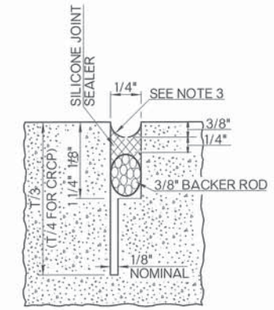

SILICONE SEALANT OPTION

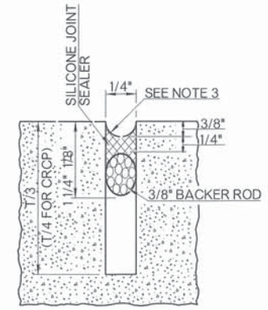

SILICONE SEALANT OPTION

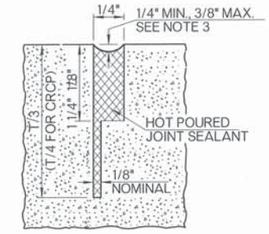

HOT POUR OPTION

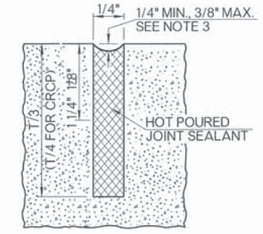

HOT POUR OPTION

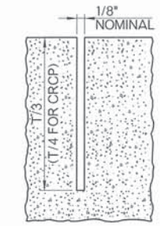

NO SEALANT OPTION

SAWED AND SEALED, CONTRACTION AND LONGITUDINAL JOINTS ALTERNATE DETAILS
UNLESS OTHERWISE SPECIFIED IN THE PLANS, ONLY THE SILICONE SEALANT OPTIONS WILL BE ALLOWED.

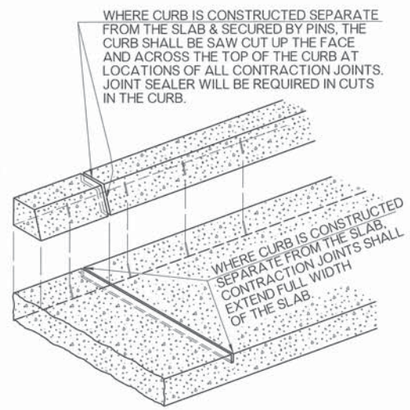

CONTRACTION JOINT WITH
SEPARATE CURB

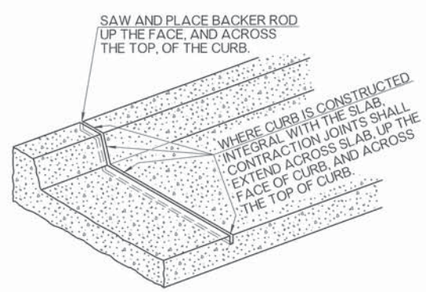

CONTRACTION JOINT WITH
INTEGRAL CURB

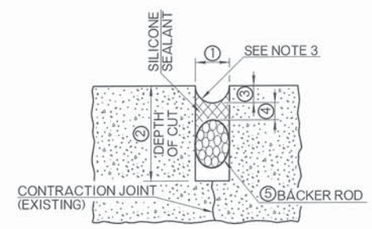

JOINT REHABILITATION DETAILS

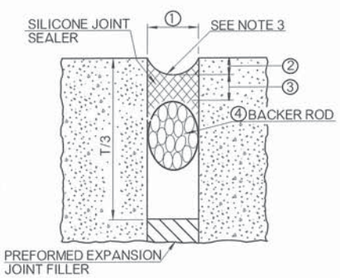

EXPANSION JOINTS / ISOLATION JOINTS
HOT POURED JOINT SEALANT MAY BE USED IN LIEU OF BACKER ROD AND SILICONE SEALANT, IF APPROVED BY THE ENGINEER

EXPANSION JOINT / ISOLATION JOINT TREATMENT TABLE			
JOINT WIDTH ①	SEALANT RECESS DEPTH ②	SILICONE SEALANT THICKNESS ③	BACKER ROD DIAMETER ④
1/2"	3/8"	1/4"	5/8"
3/4"	3/8"	3/8"	7/8"
1"	3/8"	1/2"	1 1/4"
1 1/2"	1/2"	3/4"	2"
2"	1/2"	3/4"	2 1/2"

EXPANSION OR ISOLATION JOINT WIDTH SHALL BE 1/2", UNLESS OTHERWISE SPECIFIED ON THE PLANS. TABLE VALUES, AS SHOWN THIS TABLE, SHALL BE USED IN THOSE SPECIFIED CASES.

JOINT REHABILITATION TREATMENT TABLE

SILICONE SEALANT				
JOINT WIDTH ①	DEPTH OF CUT ②	SEALANT RECESS DEPTH ③	SEALANT THICKNESS ④	BACKER ROD DIAMETER ⑤
3/8"	1 1/4"	3/8"	3/16"	1/2"
1/2"	1 3/4"	3/8"	1/4"	5/8"
3/4"	1 3/4"	3/8"	3/8"	7/8"
7/8"	1 3/4"	1/2"	7/16"	1"
1"	2"	1/2"	1/2"	1 1/8"
OVER 1"	OVER 2"	1/2"	1/2"	1 1/4"

GENERAL NOTES

1. ALL CONSTRUCTION AND MATERIALS REQUIREMENTS SHALL BE IN ACCORDANCE WITH THE 2009 ODOT STANDARD SPECIFICATIONS.
2. ALL CONCRETE JOINT SEALING SHALL BE IN ACCORDANCE WITH SECTION 415 OF THE SPECIFICATIONS.
3. THE SHAPE FACTOR, COMBINED WITH THE JOINT CLEANLINESS, IS THE CRITICAL COMBINATION NECESSARY TO GUARANTEE DESIRED BONDING AND FUNCTION OF SEALED JOINTS. THE JOINT SHAPE FACTOR IS DEFINED AS THE FINAL PRESSED SHAPE OF THE SILICONE MATERIAL. THE TOOLING OPERATION WILL FIRMLY PRESS THE FRESHLY APPLIED MATERIAL INTIMATELY AGAINST THE CUT SIDES OF THE RECESS AND THE BACKER ROD SURFACES. THE ROUNDED SHAPE ON TOP AND BOTTOM OF THE SILICONE ALLOWS THE SEALANT TO PROPERLY FLEX BUT MAINTAIN ADHERENCE TO THE PAVING. SELF LEVELING SEALANTS WILL BE INSTALLED TO BE FLUSH WITH THE PAVEMENT SURFACE.
4. ◒ ON JOINTED PORTLAND CEMENT CONCRETE PAVEMENTS, DOWELLED CONTRACTION JOINTS SHALL BE USED ON DRIVING LANES ONLY. CONCRETE SHOULDERS SHALL NOT BE DOWELLED UNLESS SPECIFIED ON THE PLANS.
5. LONGITUDINAL JOINTS BETWEEN PAVEMENT AND TIED CONCRETE SHOULDERS SHALL NOT BE SAWED OR SEALED UNLESS OTHERWISE SHOWN ON THE PLANS.
6. ⬓ ON ALL SAWED JOINTS, THE KERF DEPTH SHALL CLEAR DOWEL BARS, TIE BARS AND/OR REINFORCING STEEL BY A MINIMUM OF 1/2".
7. CONTRACTION JOINTS IN JOINTED P. C. PAVEMENT SHALL BE AT APPROXIMATELY 15'-0" CENTERS, UNLESS OTHERWISE SPECIFIED ON THE PLANS.
8. TRANSVERSE GROOVING SHALL BE CONSTRUCTED TO THE FOLLOWING DIMENSIONS: 1/8" TO 3/16" WIDE, 1/8" TO 3/16" DEEP, AND EQUALLY SPACED AT 1/2" TO 1" APART. GROOVES SHALL BE NEAT IN APPEARANCE, OF UNIFORM DEPTH, AND LOCATED 1" TO 3" FROM NEAREST CONTRACTION JOINTS.

APPROVED BY ROADWAY ENGINEER: Calvin F. H DATE 04/16/15
ROADWAY DESIGN DIVISION STANDARD

DOT JOINTS AND SEALERS - LONGITUDINAL, EXPANSION, & CONTRACTION

OKLAHOMA DEPARTMENT OF TRANSPORTATION
2009 SPECIFICATIONS

LECS-4	1
	R-14

OKLAHOMA DEPARTMENT OF TRANSPORTATION	
STANDARD REVISIONS	
DESCRIPTION	DATE

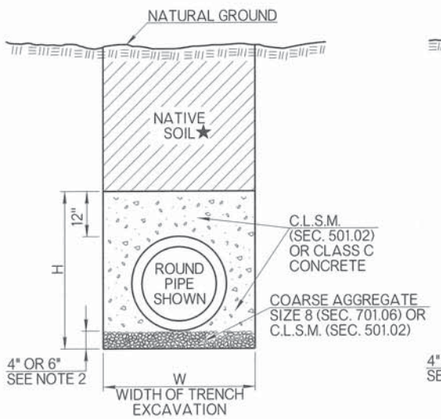

CLASS A BEDDING

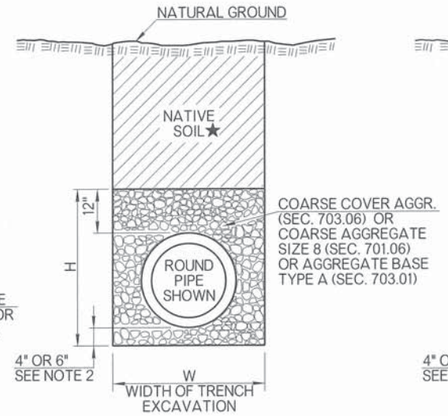

CLASS B BEDDING

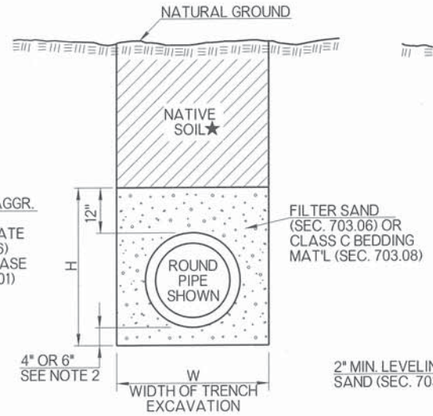

CLASS C BEDDING

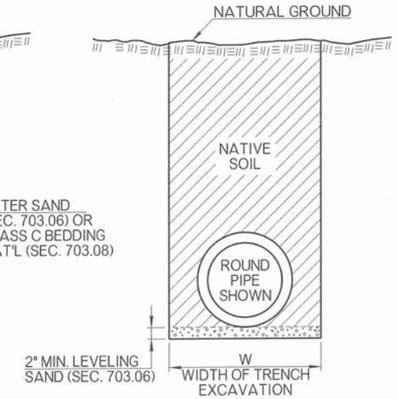

CLASS D BEDDING ALTERNATE 1

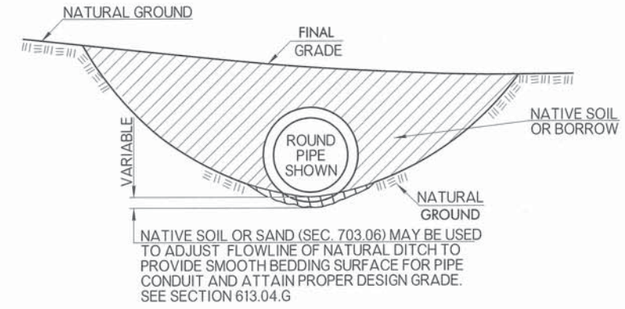

CLASS D BEDDING ALTERNATE 2

GENERAL NOTES

1. ALL CONSTRUCTION AND MATERIAL REQUIREMENTS SHALL BE IN ACCORDANCE WITH THE 2009 ODOT STANDARD SPECIFICATIONS.
2. EQUIVALENT PIPE SIZES 66 INCHES AND LARGER REQUIRE 6 INCHES OF BEDDING MATERIAL BELOW PIPE CONDUIT.
3. NATIVE SOIL FOR BACKFILL, TO BE COMPACTED IN ACCORDANCE WITH SECTION 202.04 OF THE STANDARD SPECIFICATIONS.
4. A BETTER CLASS OF BEDDING MAY BY SUBSTITUTED FOR THE NEXT LOWER CLASS. EXAMPLE: CLASS A STANDARD BEDDING CAN BE USED IN LIEU OF CLASS B STANDARD BEDDING.
5. FOR TRENCH WIDTH (W), BEDDING HEIGHT (H), PIPE DATA, MULTIPLE PIPE SPACING & BEDDING DATA, SEE ROADWAY STANDARDS SPI-4 & FPI-3.
6. DATA TABLE WILL DISPLAY 'NA' WHEN PIPE MATERIALS ARE NOT ALLOWED.
7. STANDARD BEDDING CLASS D MATERIAL(S) (ALTERNATE 1) WILL BE CONSIDERED AS INCIDENTAL AND NOT BE PAID FOR SEPARATELY. COST FOR BORROW OR FILL MATERIAL, NEEDED FOR ALTERNATE 2, WILL BE INCLUDED IN THE PRICE OF THE PIPE.
8. PIPE MATERIAL(S)/PRODUCT(S) NOT SHOWN IN THE PIPE BEDDING TABLE WILL BE EVALUATED AND APPROVED ON A CASE BY CASE BASIS.
9. ALL TEMPORARY PIPES SHALL HAVE CLASS D BEDDING UNLESS OTHERWISE SHOWN IN THE PLANS.
10. BEDDING MATERIAL TYPE B, C, AND D, SHALL BE PLACED IN 6" LAYERS AND COMPACTED TO THE SPECIFIED DENSITY USING HAND OPERATED EQUIPMENT ONLY.
11. ★ WHEN PIPE INSTALLATION IS UNDER PAVING, IN LIEU OF BACKFILLING WITH NATIVE SOIL, PLACE BEDDING MATERIAL ALL THE WAY TO TOP OF TRENCH.
12. THE USE OF AN ALTERNATE PIPE AND ITS CORRESPONDING BEDDING MATERIAL WILL BE ACCEPTABLE PROVIDED THE CRITERIA IN THE DESIGN TABLE IS MET
13. POLYPROPYLENE PIPE SHALL BE INSTALLED IN ACCORDANCE WITH ASTM D2321.

PIPE BEDDING CLASS/DESIGN TABLE

TYPE OF PIPE	■ UNDER PAVING				OUTSIDE PAVING		
	CROSS DRAIN (NHS OR ADT > 6000 VPD)	CROSS DRAIN (OTHER)	STORM SEWER (NHS OR ADT > 6000 VPD)	STORM SEWER (OTHER)	CROSS DRAIN	SIDE DRAIN	STORM SEWER
REINFORCED CONCRETE PIPE	B	C	B	C	C	D	C
CORRUGATED GALV. STEEL PIPE (CGSP)	NA	B	NA	B	C	D	C
MILL PRECOATED CGSP	NA	B	NA	B	C	D	C
CORRUGATED GALV. STRUCT. PLATE	NA	B	NA	B	C	D	C
ALUMINIZED TYPE II CSP	NA	B	NA	B	C	D	C
CORRUGATED POLYETHYLENE / PVC	NA	A	NA	A	B	B	B
POLYVINYL CHLORIDE (SC 40/80 PVC)	NA	NA	NA	NA	NA	NA	NA
POLYPROPYLENE PIPE (PP) ▲	NA	B	NA	B	C	D	C

■ WHEN THERE IS ANY POSSIBILITY OF THE PAVEMENT BEING WIDENED DURING THE LIFE OF THE DRAINAGE STRUCTURE, THE BEDDING SHALL MEET THE 'UNDER PAVING SECTION' CRITERIA FOR THE FULL EXTENT OF ANY ANTICIPATED EXPANSION TO THE FACILITY.

▲ BACKFILL WITH A MINIMUM OF TWO (2) FEET OF APPROVED BACKFILL MATERIAL.

BASIS OF PAYMENT

ITEM NO.	ITEM	UNIT
613 (R)	STANDARD BEDDING MATERIAL, CLASS A	CY
613 (S)	STANDARD BEDDING MATERIAL, CLASS B	CY
613 (T)	STANDARD BEDDING MATERIAL, CLASS C	CY

APPROVED BY ROADWAY ENGINEER: Calvin F. A DATE: 04/16/15

ROADWAY DESIGN DIVISION STANDARD

ODOT

STANDARD PIPE BEDDING

OKLAHOMA DEPARTMENT OF TRANSPORTATION
2009 SPECIFICATIONS

SPB-1 | 4

R-49

OKLAHOMA DEPARTMENT OF TRANSPORTATION	
STANDARD REVISIONS	
DESCRIPTION	DATE

TRENCHING DIMENSIONS AND STANDARD BEDDING MATERIAL QUANTITIES

	PIPE DIAM. OR DESIGN EQUIV.	H ■	T	SINGLE PIPE STANDARD TRENCHING		DOUBLE PIPE STANDARD TRENCHING		TRIPLE PIPE STANDARD TRENCHING		SPECIAL TRENCHING SINGLE, DOUBLE & TRIPLE PIPE OPTIONS W+12"
				W	STANDARD BEDDING MATERIAL ■	W	STANDARD BEDDING MATERIAL ■	W	STANDARD BEDDING MATERIAL ■	ADD'L STANDARD BEDDING MATERIAL
	IN.	FT.	FT.	FT.	CY/LF	FT.	CY/LF	FT.	CY/LF	CY/LF
ROUND PIPE	18	3.25	0.208	3.17	0.274	5.67	0.468	8.17	0.663	0.120
	24	3.83	0.25	4.00	0.386	7.00	0.629	10.00	0.873	0.142
	30	4.42	0.292	4.58	0.474	8.33	0.811	12.08	1.146	0.163
	▨ 36	5	0.333	6.17	0.751	10.67	1.193	15.17	1.636	0.185
	▨ 42	5.58	0.375	6.75	0.870	12.00	1.429	17.25	1.989	0.207
	▨ 48	6.17	0.417	7.33	0.996	13.33	1.688	19.33	2.379	0.228
	▨ 54	6.75	0.458	7.92	1.126	14.67	1.960	21.42	2.794	0.250
	▨ 60	7.33	0.5	9.50	1.532	17.00	2.521	24.50	3.510	0.271
	▨ 66	8.08	0.542	10.08	1.757	18.33	2.965	26.58	4.173	0.299
	▨ 72	8.67	0.583	10.67	1.931	19.67	3.327	28.67	4.724	0.321
	▨ 78	9.25	0.625	11.25	2.107	20.75	3.615	30.25	5.122	0.343
	▨ 84	9.83	0.667	11.83	2.288	21.83	3.908	31.83	5.529	0.364
	▨ 90	10.42	0.708	12.42	2.479	22.92	4.219	33.42	5.959	0.386
	▨ 96	11	0.75	13.00	2.671	24.00	4.527	35.00	6.383	0.407
ARCH PIPE	18	2.88	0.208	3.50	0.271	6.33	0.471	9.17	0.671	0.106
	21	3.08	0.229	4.12	0.338	7.29	0.567	10.46	0.796	0.114
	24	3.33	0.250	4.38	0.374	7.75	0.624	11.13	0.874	0.123
	30	3.79	0.291	6.10	0.603	10.13	0.915	14.16	1.227	0.140
	36	4.20	0.333	6.81	0.700	11.67	1.097	16.53	1.493	0.156
	42	4.69	0.375	7.50	0.813	13.17	1.308	18.83	1.802	0.173
	▨ 48	5.17	0.416	9.21	1.180	15.71	1.842	22.21	2.504	0.191
	▨ 54	5.58	0.458	9.83	1.243	17.05	1.946	24.28	2.649	0.207
	▨ 60	6.08	0.500	10.58	1.392	18.69	2.228	26.81	3.064	0.225
	▨ 66	6.75	0.542	11.00	1.488	19.56	2.365	28.11	3.242	0.250
	▨ 72	7.00	0.583	12.00	1.690	21.78	2.803	31.55	3.917	0.259
	▨ 78	7.83	0.625	12.42	1.854	22.64	3.071	32.86	4.288	0.272
	▨ 84	7.83	0.667	13.33	1.983	24.67	3.385	36.00	4.788	0.290
	▨ 90	8.92	0.708	14.50	2.382	27.08	4.131	39.67	5.881	0.330
	▨ 96	9.46	0.750	15.17	2.625	28.33	4.549	41.50	6.473	0.350
HORIZONTAL ELLIPTICAL PIPE	18	2.96	0.229	3.62	0.282	6.54	0.487	9.46	0.691	0.109
	24	3.46	0.27	4.54	0.387	8.04	0.640	11.54	0.893	0.128
	30	3.96	0.312	6.29	0.629	10.51	0.954	14.74	1.28	0.147
	36	4.50	0.375	7.00	0.743	12.00	1.153	17.00	1.564	0.167
	▨ 42	5.00	0.416	7.75	0.862	13.64	1.379	19.53	1.896	0.185
	▨ 48	5.42	0.458	9.42	1.170	16.08	1.788	22.75	2.406	0.200
	▨ 54	5.92	0.5	10.17	1.311	17.72	2.050	25.28	2.789	0.219
	▨ 60	6.42	0.541	10.92	1.478	19.36	2.368	27.81	3.259	0.238
	▨ 66	6.91	0.583	11.58	1.626	20.81	2.648	30.03	3.67	0.256
	▨ 72	7.41	0.625	12.33	1.807	22.44	3.004	32.56	4.201	0.275
	▨ 78	7.91	0.667	13.00	1.962	23.89	3.305	34.78	4.649	0.293
	▨ 84	8.58	0.708	13.75	2.239	25.53	3.850	37.31	5.462	0.318
	▨ 90	9.00	0.75	14.42	2.364	26.83	4.062	39.25	5.759	0.333
	▨ 96	9.5	0.791	15.17	2.570	28.25	4.408	41.33	6.245	0.352

NOTE: QUANTITIES FOR 66" & 78" EQUIV. DIAM. ARCH PIPE BASED ON METAL PIPE & ESTIMATED WALL THICKNESS.

■ FOR PIPES UNDER PAVEMENT, THE H DIMENSION AND THE STANDARD BEDDING MATERIAL QUANTITY, SHALL BE INCREASED TO GO TO THE TOP OF THE TRENCH.

▨ BEDDING MATERIAL VALUES SHOWN FOR STANDARD TRENCHING CONDITIONS MAY BE USED ONLY FOR VERTICAL WALL TRENCHES. ⬓

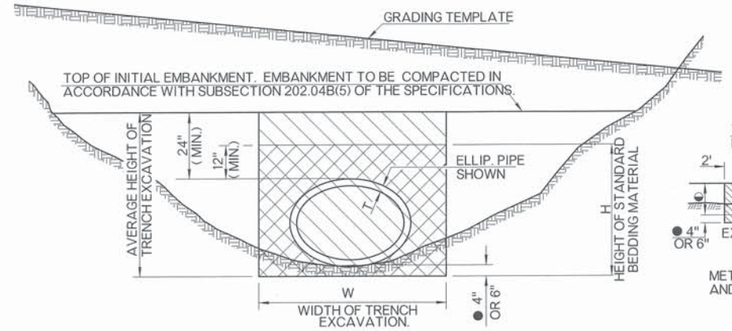

METHOD NO. 1

◒ EMBANKMENT HEIGHT PRIOR TO EXCAVATION
PIPE SIZES FROM 18" TO 42" =30"
PIPE SIZES FROM 48" TO 84" =2/3 DIAM.
PIPE SIZES LARGER THAN 84" =60"

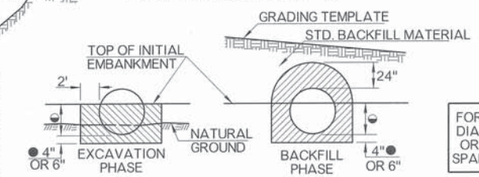

METHOD NO. 1 PAY QUANTITIES WILL BE CALCULATED AND PAID FOR WHEN METHOD NO. 2 IS USED.

METHOD NO. 2
(OPTIONAL INSTALLATION FOR R. C. PIPE)

TRENCH EXCAVATION IN EMBANKMENT SECTIONS

	CONDUIT SHAPE			DIST.
	ROUND	ARCH	ELLIPTICAL	G
FOR DIA. OR SPAN	UP TO 24"	UP TO 36"	UP TO 36"	12"
	25" TO 72"			D/2"
		37" TO 108"	37" TO 108"	D/3"
	OVER 73"	OVER 108"	OVER 108"	36"

DOUBLE PIPE INSTALLATION
(USED WITH CET END TREATMENTS)

LIMITS OF STANDARD BEDDING MATERIAL

QUANTITIES FOR BEDDING MATERIAL DO NOT INCLUDE THE SPACE WITHIN AND BOUNDED BY THE OUTER SURFACE OF THE PIPE CONDUIT.

LIMITS OF TRENCH EXCAVATION

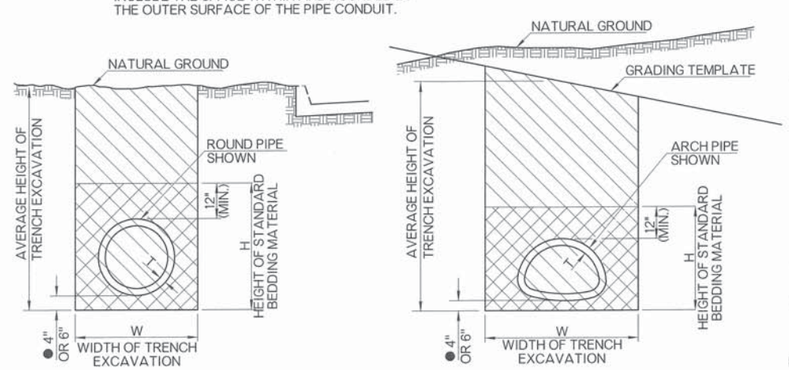

TRENCH EXCAVATION IN CUT SECTIONS

GENERAL NOTES

1. ALL CONSTRUCTION AND MATERIAL REQUIREMENTS SHALL BE IN ACCORDANCE WITH THE 2009 ODOT STANDARD SPECIFICATIONS.
2. TRENCH EXCAVATION AND BEDDING MATERIAL WILL NOT BE REQUIRED FOR PIPE INSTALLATIONS OF SIDE DRAINS UNLESS OTHERWISE NOTED ON THE PLANS.
3. FOR PIPE UNDERDRAIN INSTALLATIONS, SEE ROADWAY STANDARD PUD-3.
4. ⬓ SPECIAL TRENCHING CONDITIONS ARE THOSE AS DEFINED BY O.S.H.A. REGULATIONS, TITLE 29 CFR CHAPTER XVII, PART 1926.650, 1926.651 & 1926.652, SO DEFINED WILL APPLY UNTIL THEY ARE IN CONFLICT WITH CURRENT SPECIFICATIONS, FOR TRENCH DEPTHS OVER FIVE FEET. WHERE O.S.H.A. REGULATIONS FOR SPECIAL TRENCHING ARE APPLIED, QUANTITIES AND DIMENSIONS FOR SPECIAL TRENCHING WILL BE USED FOR COMPUTING QUANTITIES. SEE TABLE OF TRENCHING DIMENSIONS AND STANDARD BEDDING MATERIAL QUANTITIES.
5. NORMAL BACKFILLING OPERATIONS SHALL FOLLOW BEDDING AND PIPE INSTALLATION AS CLOSELY AS PRACTICAL. IN NO CASE SHALL A PIPE INSTALLATION SUBJECT TO SUDDEN FLOW DEVELOPMENT BE LEFT WITHOUT SUFFICIENT BACKFILL TO RESTRAIN THE CONDUIT AND PREVENT JOINT SEPARATION AND/OR PIPING SCOUR. PHYSICALLY RESTRAINING THE CONDUIT MAY BE USED TO AUGMENT OR REPLACE THIS IMMEDIATE BACKFILL REQUIREMENT.
6. ANY EXCESS EXCAVATION NOT USED FOR BACKFILL WILL BECOME THE PROPERTY OF THE CONTRACTOR AND DISPOSED OF, BY HIM, IN A MANNER APPROVED BY THE ENGINEER.
7. ○ STANDARD BEDDING QUANTITIES FOR ROUND PIPE ARE BASED ON AASHTO DESIGNATED CLASS III (WALL B) REINFORCED CONCRETE PIPE.
8. ⬓ WHEN REQUIRED, THE SIDES OF THE TRENCHES SHALL BE SHEETED AND SHORED OR OTHERWISE SUPPORTED WHEN THE TRENCH IS MORE THAN 5.0 FEET IN DEPTH. IN LIEU OF SHEETING, THE SIDES OF THE TRENCH ABOVE THE 5.0 FOOT LEVEL MAY BE SLOPED TO PRECLUDE COLLAPSE, SEE OPTIONAL TRENCHES DETAIL THIS SHEET.
9. ⊠ PROPER COMPACTION OF BACKFILL REQUIRES A VERTICAL WALLED TRENCH TO 24 INCHES ABOVE TOP OF PIPE, REGARDLESS OF EXCAVATION ABOVE THAT ELEVATION.
10. ● EQUIVALENT PIPE SIZES 66 INCHES AND LARGER REQUIRE 6 INCHES OF BEDDING MATERIAL BELOW PIPE CONDUIT.
11. ◑ ELLIPTICAL PIPE DIMENSIONS CONFORM TO AASHTO M 207, AS DESIGNATED RISE BY SPAN.
12. FOR COMPUTING TRENCH EXCAVATION & STANDARD BEDDING QUANTITIES, THE LENGTH OF THE CULVERT SHALL INCLUDE END SECTION AND END TREATMENT LENGTHS.
13. MULTIPLE PIPE INSTALLATIONS WILL REQUIRE A MINIMUM OF 12" BETWEEN PIPES FOR PROPER COMPACTION.

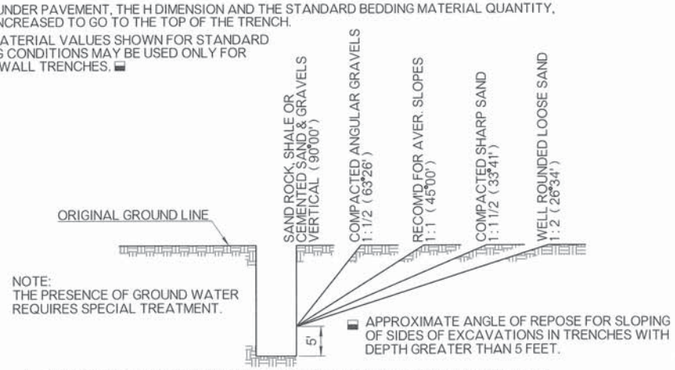

NOTE:
THE PRESENCE OF GROUND WATER REQUIRES SPECIAL TREATMENT.

⬓ APPROXIMATE ANGLE OF REPOSE FOR SLOPING OF SIDES OF EXCAVATIONS IN TRENCHES WITH DEPTH GREATER THAN 5 FEET.

⬓ OPTIONAL TRENCHES WITH DEPTH GREATER THAN 5.0 FEET

EXCAVATION AND BEDDING MATERIAL WILL BE MEASURED AND PAID FOR AS IF SHEETING & SHORING WAS USED. (SPECIAL TRENCHING=STD. WIDTH TRENCH+12")

TABLE OF EQUIVALENT PIPES

EQUIV. DIA.	REINF. CONC. ARCH PIPE	STEEL ARCH PIPE	ALUMINUM ARCH PIPE	REINF. CONC. ELLIPTICAL PIPE ◑
18"	22" x 13"	21" x 15"	21" x 15"	14" x 23"
21"		24" x 18"	24" x 18"	
24"	28" x 18"	28" x 20"	28" x 20"	19" x 30"
27"				22" x 34"
30"	36" x 22"	35" x 24"	35" x 24"	24" x 38"
36"	43" x 26"	42" x 29"	42" x 29"	29" x 45"
42"	51" x 31"	49" x 33"	49" x 33"	34" x 53"
48"	58" x 36"	57" x 38"	57" x 38"	38" x 60"
54"	65" x 40"	64" x 43"	64" x 43"	43" x 68"
60"	73" x 45"	71" x 47"	71" x 47"	48" x 76"
66"		77" x 52"	77" x 52"	53" x 83"
72"	88" x 54"	83" x 57"	83" x 57"	58" x 91"
78"		87" x 63"	92" x 65" ▲	63" x 98"
84"	102" x 62"	95" x 67"	95" x 67" ▲	68" x 106"
90"	115" x 72"	103" x 71"	103" x 71" ▲	72" x 113"
96"	122" x 77"	112" x 75"	112" x 75" ▲	77" x 121"

▲ STRUCTURAL PLATE ARCH.

BASIS OF PAYMENT

ITEM NO.	ITEM	UNIT
613 (R)	STANDARD BEDDING MATERIAL, CLASS A	CY
613 (S)	STANDARD BEDDING MATERIAL, CLASS B	CY
613 (T)	STANDARD BEDDING MATERIAL, CLASS C	CY
613 (V)	TRENCH EXCAVATION	CY

APPROVED BY ROADWAY ENGINEER: Calvin F. H DATE: 04/10/15

ROADWAY DESIGN DIVISION STANDARD

STANDARD PIPE INSTALLATION

OKLAHOMA DEPARTMENT OF TRANSPORTATION
2009 SPECIFICATIONS

SPI-4	1
	R-47

REVISIONS	
DESCRIPTION	DATE

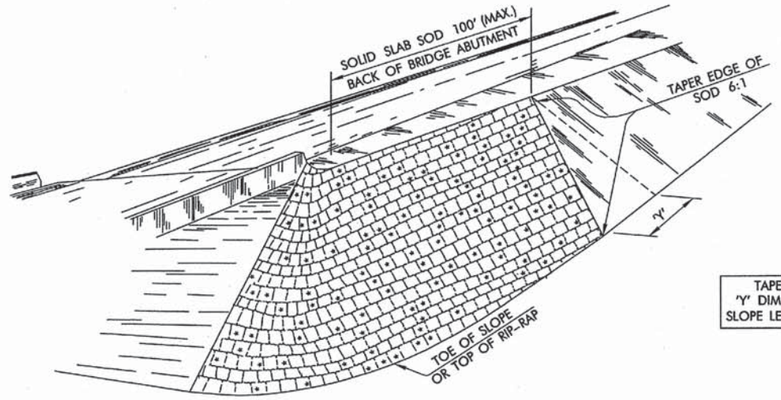

TYPICAL PLACEMENT OF SOLID SLAB SODDING ON FILL SLOPES, APPROACHES TO OVERPASSES AND BRIDGES.

TAPER NOTE
'Y' DIMENSION = SLOPE LENGTH x 0.17

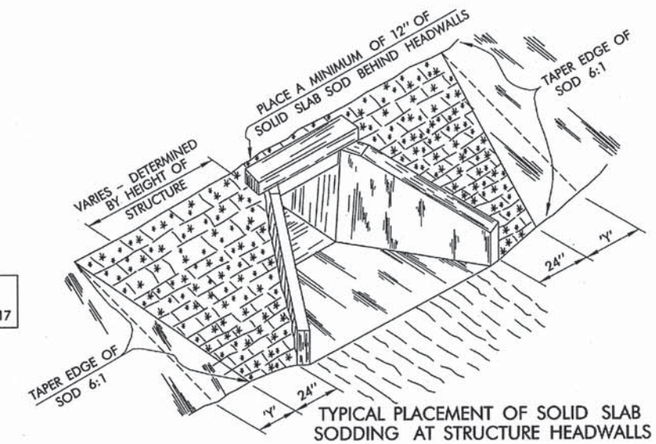

TYPICAL PLACEMENT OF SOLID SLAB SODDING AT STRUCTURE HEADWALLS

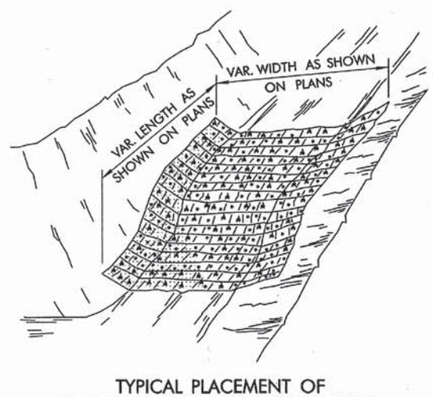

TYPICAL PLACEMENT OF SOLID SLAB SODDING IN DITCHES

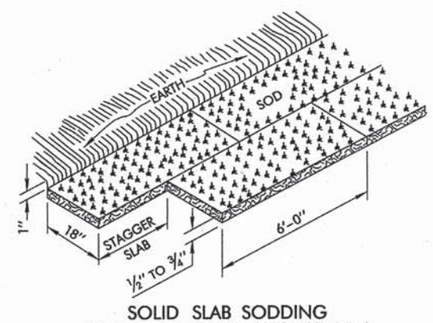

SOLID SLAB SODDING
(MARCH 1 THRU AUGUST 31)

THE PLACEMENT OF SOLID SLAB SOD SHALL BE RESTRICTED TO THE PERIOD FROM MARCH 1 THRU AUGUST 31, UNLESS OTHERWISE APPROVED BY THE ENGINEER.

GENERAL NOTES

1. ALL CONSTRUCTION AND MATERIAL REQUIREMENTS SHALL BE IN ACCORDANCE WITH THE 2009 ODOT STANDARD SPECIFICATIONS.
2. SOLID SLAB SOD SHALL BE PLACED IN HORIZONTAL ROWS WITH THE LONGEST SIDE OF EACH SLAB RUNNING PARALLEL TO THE ROADWAY, AND THE SLABS IN ALTERNATE ROWS STAGGERED HALF THE LENGTH OF EACH INDIVIDUAL SLAB. ENSURE THE ROWS RUN PARALLEL TO THE ROADWAY.
3. SLABS SHALL BE CUT AND HARVESTED WITH A COMMERCIAL SOD CUTTER TO THE DIMENSIONS SHOWN, THEN LOADED, TRANSPORTED AND HANDLED ON PALLETS.
4. AFTER PLACEMENT OF SOLID SLAB SOD, EARTH AT THE OUTER EDGES OF THE PLACEMENT SHALL BE BACKFILLED AND LOOSELY COMPACTED TO AT LEAST 1" ABOVE THE TOP OF THE SOLID SLAB SODDING.
5. STAKE SOD ON ALL SLOPES 1:2 OR STEEPER, AND ON ANY AREAS THAT ARE IN SUCH CONDITION THAT THERE IS DANGER OF SOD SLIPPING. PERFORM STAKING CONCURRENTLY WITH SOD PLACEMENT AND PRIOR TO TAMPING WITH SOUND WOODEN STAKES APPROXIMATELY 1 INCH SQUARE OR 1 INCH IN DIAMETER AND NOT LESS THAN 12 INCHES IN LENGTH, OR USE METAL STAPLES IN PLACE OF WOODEN STAKES. PLACE, STAKE AND STAPLE THE SOD WHERE NECESSARY, AND AS DETERMINED BY THE ENGINEER.

BASIS OF PAYMENT		
ITEM NO.	ITEM	UNIT
230(A)	SOLID SLAB SODDING	S.Y.

APPROVED BY ROADWAY ENGINEER: Timothy A. Tegeler DATE: 12/2/09

ROADWAY STANDARD

SOLID SLAB SODDING

2009 SPECIFICATIONS

SSS-1	0
	R-3

OKLAHOMA DEPARTMENT OF TRANSPORTATION	
STANDARD REVISIONS	
DESCRIPTION	DATE

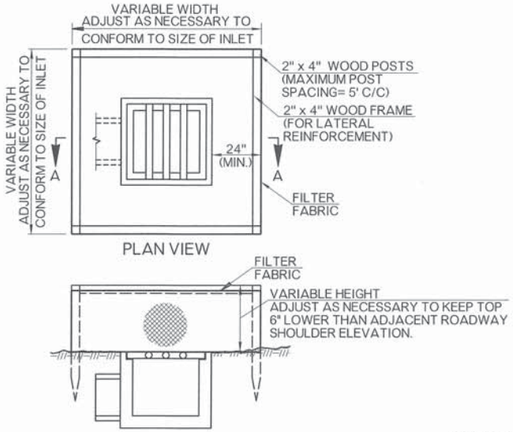

SECTION A - A
SEDIMENT FILTER

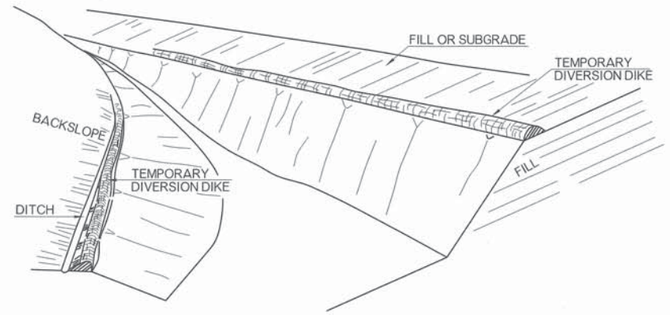

DIVERSION DIKES

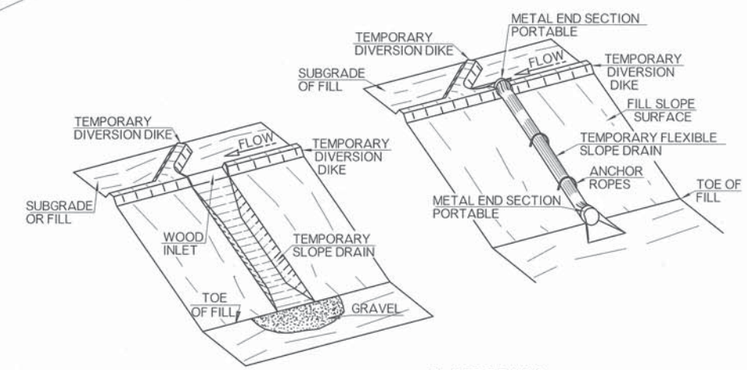

SLOPE DRAINS

TEMPORARY SEDIMENT FILTER

SYMBOLOGY

SYMBOL TO BE USED TO DENOTE DEVICE ON PLANS

TSF
#

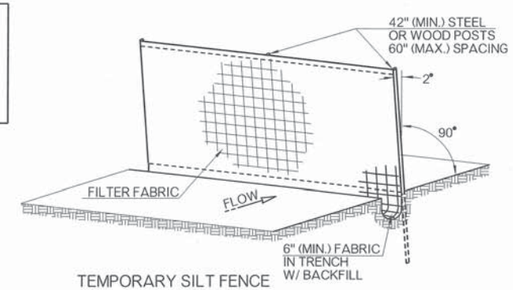

TEMPORARY SILT FENCE
RECOMMENDED TOE-IN METHOD

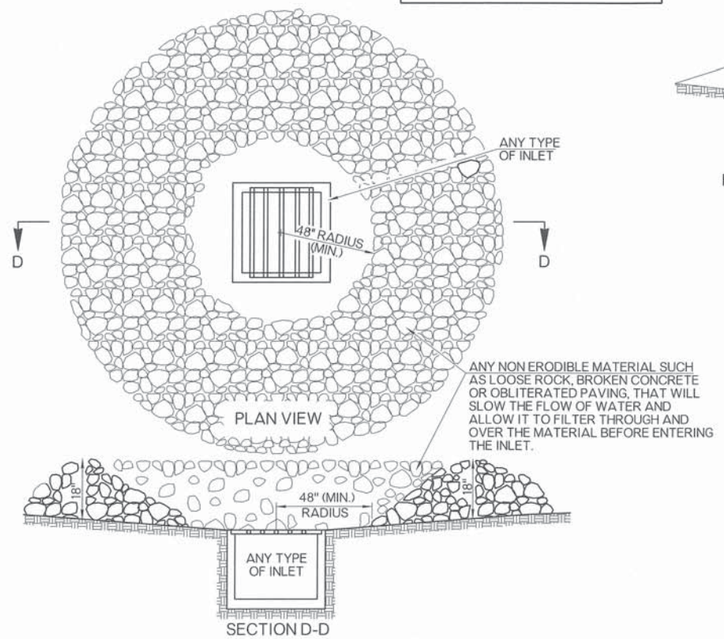

SECTION D-D

SEDIMENT FILTER
(TYPE II)

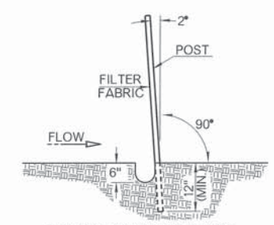

TEMPORARY SILT FENCE
SECTION

TEMPORARY SILT FENCE

SYMBOLOGY

SYMBOL TO BE USED TO DENOTE DEVICE ON PLANS

TEMPORARY SLOPE DRAIN

SYMBOLOGY

SYMBOL TO BE USED TO DENOTE DEVICE ON PLANS

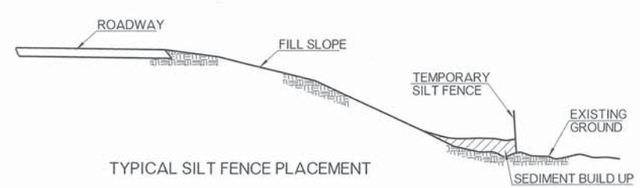

TYPICAL SILT FENCE PLACEMENT

GENERAL NOTES

1. ALL CONSTRUCTION AND MATERIAL REQUIREMENTS SHALL BE IN ACCORDANCE WITH THE 2009 ODOT STANDARD SPECIFICATIONS.
2. COST OF TEMPORARY DIVERSION DIKES TO BE INCLUDED IN PRICE BID FOR OTHER ITEMS OF WORK.

BASIS OF PAYMENT		
ITEM NO.	ITEM	UNIT
221 (A)	TEMPORARY SLOPE DRAINS	LF
221 (C)	TEMPORARY SILT FENCE	LF
221 (D)	TEMPORARY SEDIMENT FILTER	EA

APPROVED BY
ROADWAY ENGINEER: Calvin F. A DATE: 04/16/15

ROADWAY DESIGN DIVISION STANDARD

ODOT

TEMPORARY SEDIMENT CONTROLS

OKLAHOMA DEPARTMENT OF TRANSPORTATION
2009 SPECIFICATIONS

TSC2-3	2
	R-5

OKLAHOMA DEPARTMENT OF TRANSPORTATION	
STANDARD REVISIONS	
DESCRIPTION	DATE

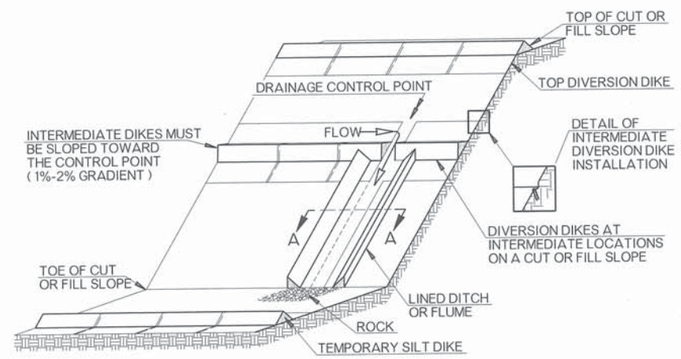

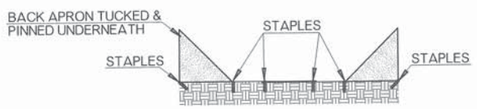

TEMPORARY DITCH LINER
SECTION A - A

TEMPORARY SILT DIKE INSTALLATION FOR DIVERSION DIKES AND / OR DITCH LINER

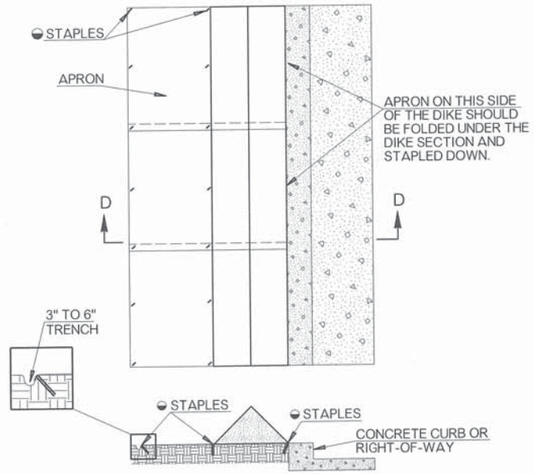

SECTION D - D

TEMPORARY SILT DIKE INSTALLATION FOR CONTINUOUS BARRIER

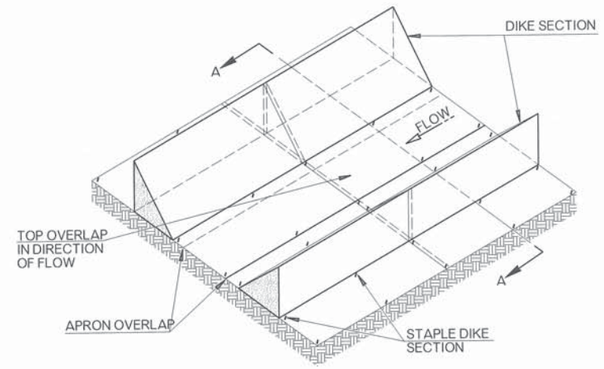

TEMPORARY SILT DIKE INSTALLATION FOR TEMPORARY DITCH LINER

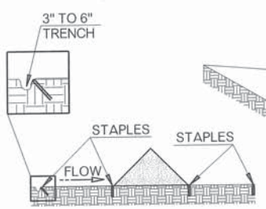

SECTION C - C

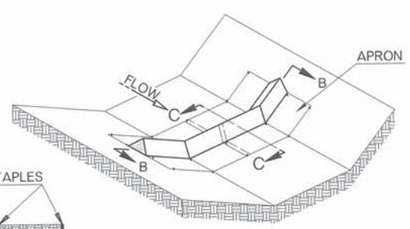

SILT DIKE UNIT
ISOMETRIC / CUT SECTION

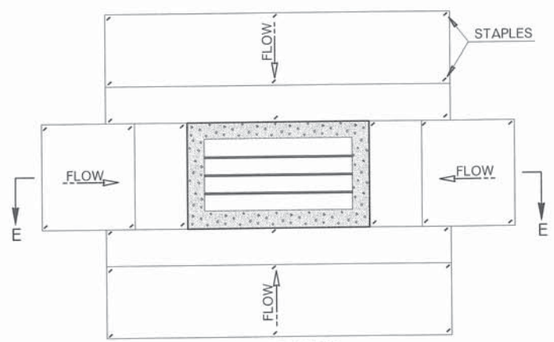

DROP INLET

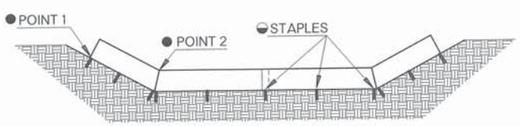

DIKE SECTION
SECTION B - B

TEMPORARY SILT DIKE INSTALLATION FOR ROADWAY DITCH OR DRAINAGE DITCH

- POINT "1" MUST BE HIGHER THAN POINT "2" TO ENSURE THAT WATER FLOWS OVER THE DIKE AND NOT AROUND THE ENDS.
- STAPLES SHALL BE PLACED WHERE THE UNITS OVERLAP AND IN THE CENTER OF THE UNIT AS SHOWN ON THE DIAGRAM.

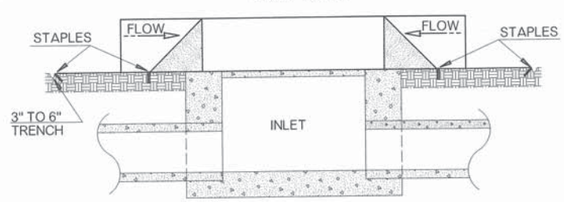

SECTION E - E

TEMPORARY SILT DIKE INSTALLATION FOR DROP INLETS

SYMBOLOGY

SYMBOL TO BE USED TO DENOTE DEVICE ON PLANS

NOTE: SILT DIKE SHOULD ONLY BE USED FOR DROP INLETS IN SUMP LOCATIONS. FOR DROP INLETS ON GRADE, USE SEDIMENT TRAPS OR OTHER CONTROLS.

GENERAL NOTES

1. ALL CONSTRUCTION AND MATERIAL REQUIREMENTS SHALL BE IN ACCORDANCE WITH THE 2009 ODOT STANDARD SPECIFICATIONS.
2. THIS WORK SHALL CONSIST OF FURNISHING, INSTALLING, AND MAINTAINING THE TEMPORARY SILT DIKE. THE DIKES SHALL BE USED AS A CONTINUOUS LINE BARRIER AT THE TOE OF SLOPE OR ACROSS THE ROADWAY DITCH TO CONTAIN SEDIMENT AND MINIMIZE EROSION, OR AS DIRECTED BY THE ENGINEER. THESE DIKES SHALL BE INSTALLED AND LOCATED AS SOON AS CONSTRUCTION WILL ALLOW OR AS DIRECTED BY THE ENGINEER.
3. TEMPORARY SILT DIKE SHALL BE TRIANGULAR SHAPED HAVING A HEIGHT OF AT LEAST 8" TO 10" IN THE CENTER WITH EQUAL SIDES AND A 16" TO 20" BASE. THE TRIANGULAR SHAPED INNER MATERIAL SHALL BE URETHANE FOAM MEETING THE REQUIREMENTS FOR ASTM D3574. THE OUTER COVER SHALL BE A WOVEN GEOTEXTILE FABRIC PLACED AROUND THE INNER MATERIAL & ALLOWED TO EXTEND BEYOND BOTH SIDES OF THE TRIANGLE 24" TO 36". THIS FABRIC SHOULD BE MILDEW RESISTANT, ROT-PROOF AND RESISTANT TO HEAT AND ULTRAVIOLET RADIATION MEETING REQUIREMENTS FOR SEDIMENT CONTROL IN AASHTO M 288. THE DIKES SHALL BE ATTACHED TO THE GROUND WITH WIRE STAPLES. THE STAPLES SHALL BE NO. 11 GAUGE WIRE AND BE AT LEAST 6" TO 8" LONG. STAPLES SHALL BE PLACED AS SHOWN ON THESE DETAILS.
4. ACCEPTED TEMPORARY SILT DIKE, MEASURED AS PROVIDED ABOVE, WILL BE PAID FOR AT THE CONTRACT UNIT PRICE BID FOR TEMPORARY SILT DIKE. PRICE BID WILL INCLUDE THE COST OF FURNISHING THE DIKES, INSTALLING, MAINTAINING AND REMOVAL WHEN DIRECTED BY THE ENGINEER.

BASIS OF PAYMENT

ITEM NO.	ITEM	UNIT
221 (F)	TEMPORARY SILT DIKE	LF

NOTE: SILT DIKES ARE ONLY FURNISHED IN 7' INCREMENTS.

APPROVED BY ROADWAY ENGINEER: Caleb E. A DATE 04/16/15

ROADWAY DESIGN DIVISION STANDARD

TEMPORARY SILT DIKE

OKLAHOMA DEPARTMENT OF TRANSPORTATION
2009 SPECIFICATIONS

TSD-2	0
	R-6

REVISIONS	
DESCRIPTION	DATE

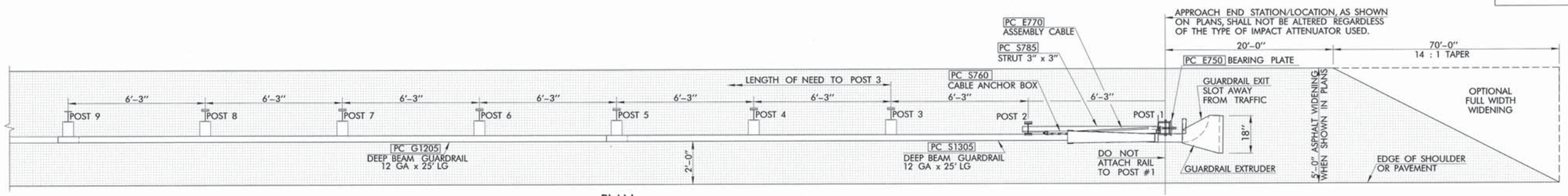

PLAN

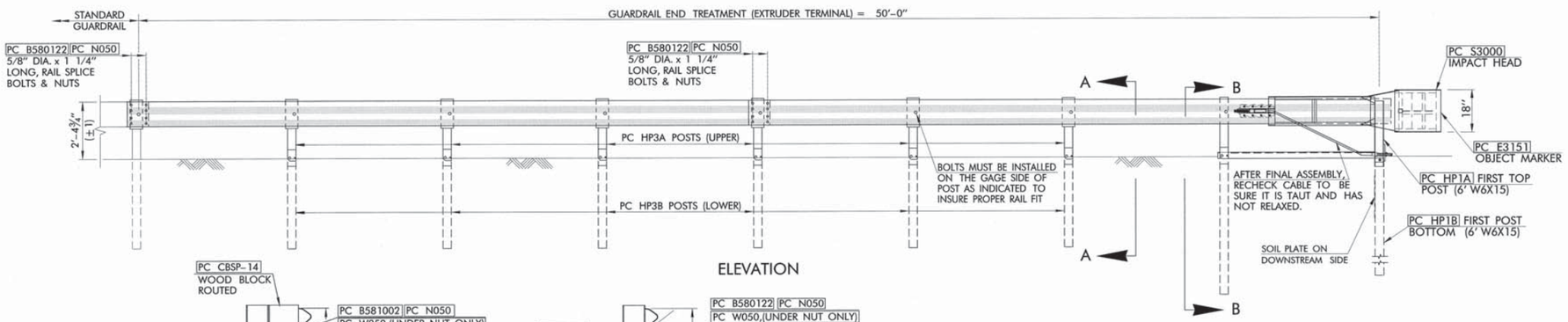

ELEVATION

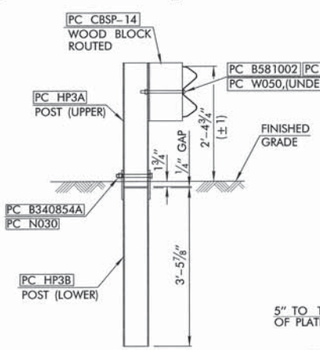

SECTION A–A
(TYP @ POSTS 3 THRU 8)

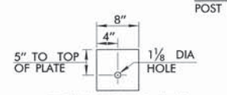

BEARING PLATE
PC E750

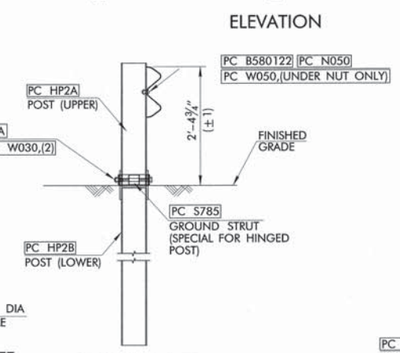

SECTION B–B
(POST 2)

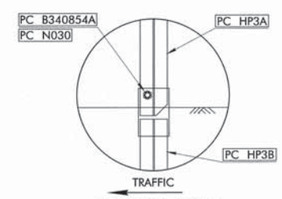

HINGED POST
POSTS 3 THRU 8

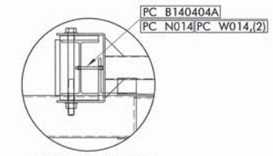

IMPACT HEAD CONNECTION DETAIL

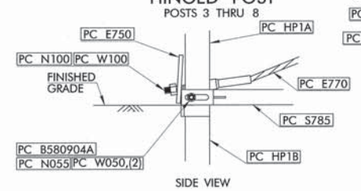

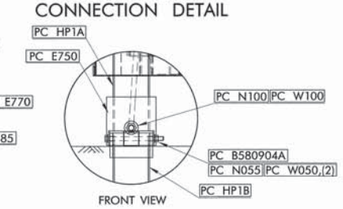

POST #1 CONNECTION DETAILS

GENERAL NOTES

1. ALL CONSTRUCTION AND MATERIAL REQUIREMENTS SHALL BE IN ACCORDANCE WITH THE 2009 ODOT STANDARD SPECIFICATIONS.
2. ONLY 25'-0" W-BEAM GUARDRAIL ELEMENTS MAY BE USED FOR THIS DESIGN BETWEEN POST 1 & POST 5. STANDARD 12'-6" ELEMENTS MAY BE USED BETWEEN POST 5 & POST 9, IF APPROVED BY THE ENGINEER.
3. THE 5/8" FLAT WASHER IS USED UNDER THE NUT BEHIND THE POST ONLY. NO WASHER IS USED ON THE TRAFFIC SIDE OF GUARDRAIL.
4. EXTRUDER TYPE TERMINALS SHALL NOT BE INSTALLED WHEN ADJACENT DRIVING LANES ARE WITHIN 25 FEET (HORIZONT.) OF EXTRUSION SIDE OF THE EXTRUDER TERMINAL.
5. WOOD OR RECYCLED COMPOSITE (PLASTIC) BLOCKOUTS MAY BE USED THROUGHOUT THE LENGTH OF THE TERMINAL, IF APPROVED BY THE ENGINEER.
6. INSTALL RAIL PARALLEL TO ROADWAY EDGE LINE. WHEN TAPER IS REQUIRED, USE A 30:1 OR FLATTER TAPER RATE.

BILL OF MATERIAL

PC	QTY	DESCRIPTION	PC	QTY	DESCRIPTION
S3000	1	IMPACT HEAD	B580122	17	5/8" Dia. x 1 1/4" SPLICE BOLT, POST #2
S1305	1	W-BEAM GUARDRAIL END SECTION – 12 GA., 25'	B580904A	1	5/8" Dia. x 9" HEX BOLT GR. 5
G1205	1	W-BEAM GUARDRAIL – 12 GA., 25'	B340854A	7	3/4" Dia. x 8 1/2" HEX BOLT GR. 5
HP1A	1	FIRST POST ASSEMBLY TOP, 2'- 4 3/8"	B581002	6	5/8" Dia. x 10" H.G.R. BOLT (Posts 3-8)
HP1B	1	FIRST POST ASSEMBLY BOTTOM, 6'- 0"	N055	1	5/8" Dia. HEX NUT (Post 1 only)
HP2A	1	SECOND POST ASSEMBLY TOP, 2'- 6 3/8"	N050	23	5/8" Dia. H.G.R. NUT (at splice (16) & at Posts 1-8)
HP2B	1	SECOND POST ASSEMBLY BOTTOM, 6'- 0"	W050	9	H.G.R. WASHER (At Post 1 (2), & Post 2-8)
HP3A	6	HINGED LINE POST TOP, 2'- 5 5/8"	N100	2	1" ANCHOR CABLE HEX NUT
HP3B	6	HINGED LINE POST BOTTOM, 3'- 5 7/8"	W100	2	1" ANCHOR CABLE WASHER
E750	1	BEARING PLATE	B140404A	2	1/4" x 4" HEX BOLT GR. 5
S760	1	CABLE ANCHOR BOX	N014	2	1/4" HEX NUT
E770	1	BCT CABLE ANCHOR ASSEMBLY	W014	4	1/4" WASHER
S785	1	GROUND STRUT (SPECIAL FOR HINGED POST)	SB58A	8	CABLE ANCHOR BOX SHOULDER BOLT
CBSP-14	6	ROUTED BLOCK	N030	7	3/4" HEX NUT
			N055A	8	1/2" A325 STR. NUT
			W030	2	3/4" WASHER
			W050A	16	1 1/16" OD x 9/16" ID A325 STR. WASHER
			E3151	1	OBJECT MARKER (18" x 18")

PC=PRODUCT CODE ET HBA=EXTRUDER TERMINAL HINGED BREAK AWAY

REFLECTIVE MARKER

A. REFLECTORIZED MARKER(S) SHOULD BE ATTACHED TO THE VERTICAL END (18" x 18" FACE – TYP.) OF THE G.E.T PRIOR TO INSTALLATION.
B. ATTACHMENT SURFACE SHOULD BE THOROUGHLY CLEANED & DRY BEFORE ATTACHING ADHESIVE MARKER (STICK-ON SHEETING).
C. ATTACHED ADHESIVE SHEETING SHOULD BE FREE OF AIR BUBBLES WITH ALL EDGES FIRMLY BONDED.
D. STRIPING PATTERN MAY CONSIST OF 3" OR 4" STRIPES.

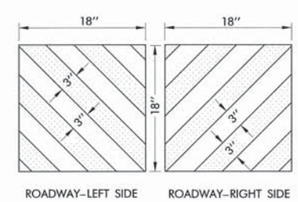

REFLECTIVE MARKER DETAIL

BASIS OF PAYMENT		
ITEM NO.	ITEM	UNIT
623(G)	GUARDRAIL END TREATMENT – EXTRUDER TERMINAL	EA.

APPROVED BY TRAFFIC ENGINEER: DATE: 4/9/12

TRAFFIC MAINTENANCE STANDARD

GUARDRAIL END TREATMENT – SKT-350, HBA STEEL POST (27 3/4" SYSTEM)

2009 SPECIFICATIONS

GET-2	00
M-023	

REVISIONS	
DESCRIPTION	DATE

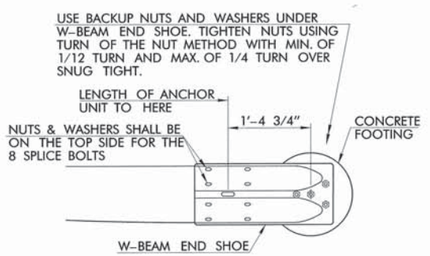

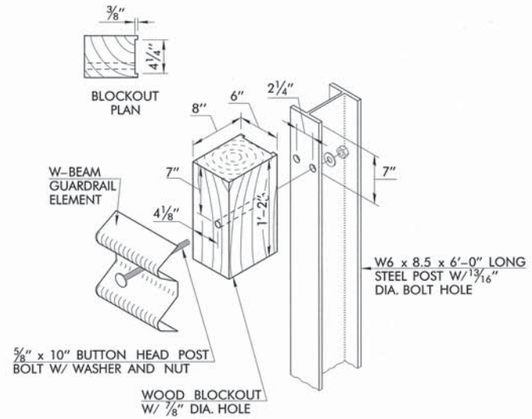

STEEL POST AND WOOD BLOCKOUT

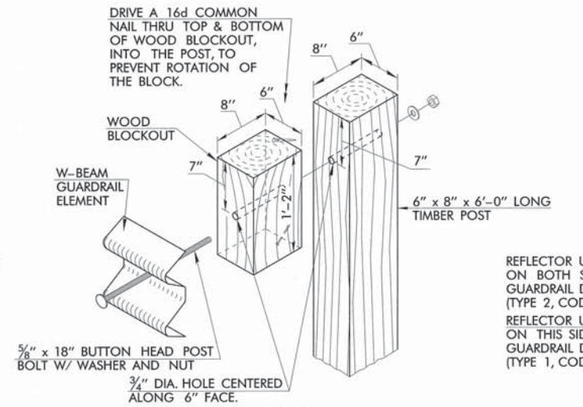

OPTIONAL
WOOD POST AND WOOD BLOCKOUT

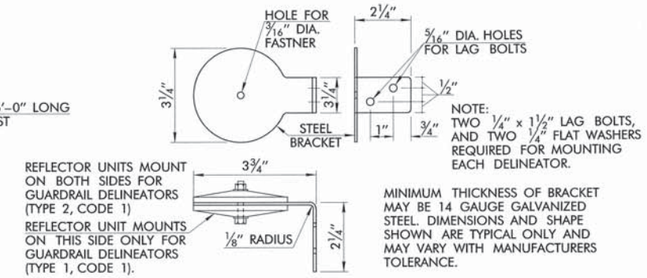

TYPICAL BRACKET FOR MOUNTING 3 1/4"
ROUND DELINEATOR TO GUARD RAIL BLOCKOUT

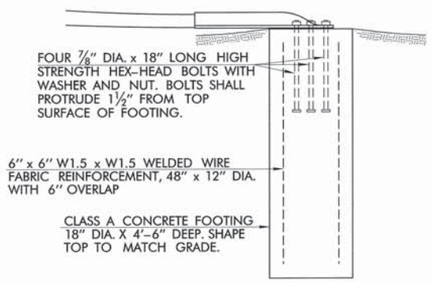

GROUND ANCHOR FOOTING DETAIL

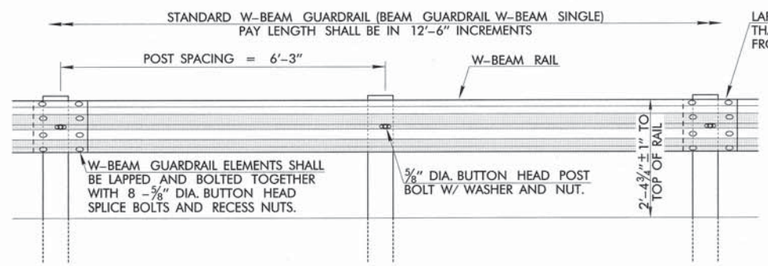

STANDARD W-BEAM GUARDRAIL ELEVATION

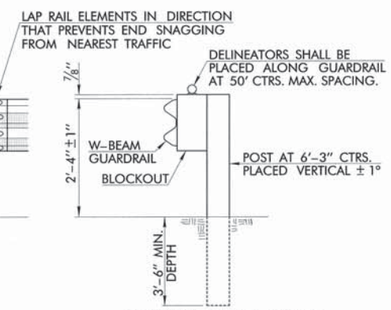

STANDARD W-BEAM
GUARDRAIL SECTION

OPTIONAL TYPE POSTS OR BLOCKOUTS FOR STANDARD GUARDRAIL

THE CONTRACTOR MAY, AT HIS OPTION, SELECT AND USE ONE OF THE TYPE POSTS AND BLOCKOUTS SHOWN ABOVE, OR AN APPROVED ALTERNATE. THIS POST & BLOCKOUT CHOICE MUST BE USED ON THE ENTIRE PROJECT. ALTERNATE POST (INCLUDING SPECIAL SHAPES) MAY BE USED UPON THE APPROVAL OF THE ENGINEER. ALTERNATE BLOCKOUTS (SUCH AS RECYCLED MATERIAL, RUBBER, PLASTIC AND COMPOSITE PRODUCTS) MAY BE USED IF PRODUCT HAS BEEN EVALUATED AND APPROVED BY ODOT.

GENERAL NOTES

1. ALL CONSTRUCTION AND MATERIAL REQUIREMENTS SHALL BE IN ACCORDANCE WITH THE 2009 ODOT STANDARD SPECIFICATIONS.
2. STANDARD GUARDRAIL WITH 6'-3" POST SPACING MEETS NHCRP-350, TEST LEVEL 3. IF A RIGID HAZARD IS TO BE LEFT BEHIND THE GUARDRAIL, WITHIN 3'-0" OF THE RAIL, CONSIDER USING A DIFFERENT TREATMENT.
3. WOOD POSTS AND BLOCKOUTS SHALL BE STRESS GRADE 1200F.
4. ALL STANDARD GUARDRAIL AND GUARDRAIL EXTRUDER TERMINALS SHALL BE OFFSET SO THAT RAIL FACE IS TWO FEET OUTSIDE THE SHOULDER. FOR TRANSITION FROM BRIDGE RAIL TO TWO FOOT OFFSET, BEGINNING AT THE GUARDRAIL BRIDGE CONNECTION, TRANSITION THE STANDARD GUARDRAIL, AT A 30:1 TAPER, UNTIL THE RAIL REACHES THE OFFSET DISTANCE.
5. ALL GUARDRAIL, METAL POSTS, PLATES AND HARDWARE SHALL BE GALVANIZED AFTER FABRICATION.
6. ANY FIELD CUTS OR HOLES DRILLED IN GALVANIZED MATERIALS SHALL BE COATED WITH A ZINC OXIDE PAINT. SEE SECTION 730 OF THE SPECIFICATIONS.
7. GUARDRAIL DELINEATORS (TYPE 2, CODE 1) WILL BE REQUIRED FOR ALL TWO-LANE ROADWAYS. ALL OTHER ROADWAYS WILL REQUIRE GUARDRAIL DELINEATORS (TYPE 1, CODE 1).

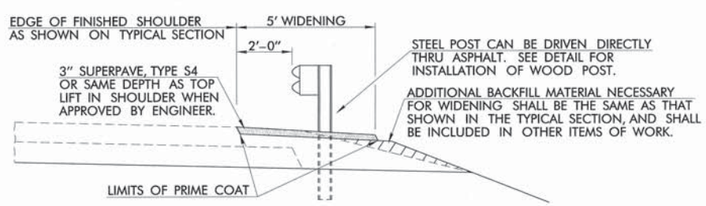

DETAIL OF SHOULDER WIDENING FOR STANDARD GUARDRAIL

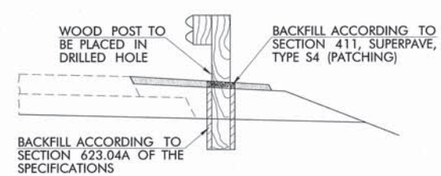

INSTALLATION OF WOOD POST IN ASPHALT WIDENING

BASIS OF PAYMENT		
ITEM NO.	ITEM	UNIT
623 (A)	BEAM GUARDRAIL W-BEAM SINGLE	L.F.
853	GUARDRAIL DELINEATORS (TYPE 1, CODE 1)	EA.
853	GUARDRAIL DELINEATORS (TYPE 2, CODE 1)	EA.

NOTE: PAYITEM GUARDRAIL ANCHOR UNIT TYPE B INCLUDES ALL LABOR AND MATERIALS TO INSTALL 25'-0" TWISTED RAIL ELEMENT, W-BEAM END SHOE, CONC. FOOTING, AND FOUR ANCHOR BOLTS.

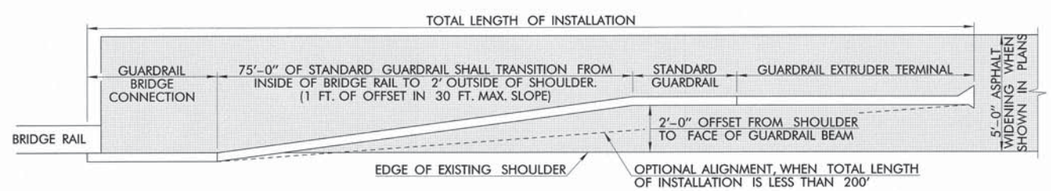

TYPICAL GUARDRAIL INSTALLATION AT BRIDGE

APPROVED BY TRAFFIC ENGINEER: DATE: 4/9/12

TRAFFIC MAINTENANCE STANDARD

GUARDRAIL AND HARDWARE
(1 OF 3)
(27 3/4" SYSTEM)

2009 SPECIFICATIONS

GRH1-1	00
	M-027

REVISIONS	
DESCRIPTION	DATE

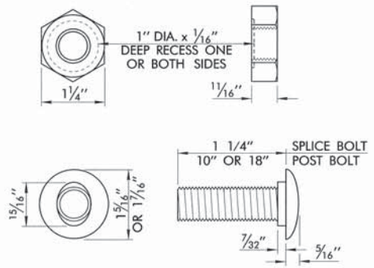

5/8" DIA. BUTTON HEAD BOLT & RECESS NUT

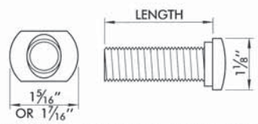

ALTERNATE BUTTON HEAD BOLT

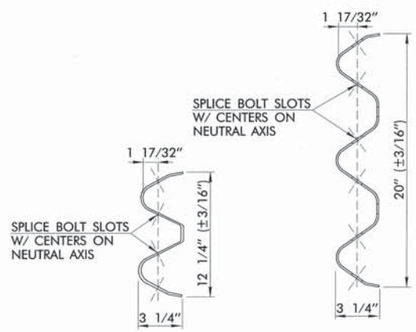

W-BEAM GUARDRAIL SECTION

THRIE BEAM GUARDRAIL SECTION

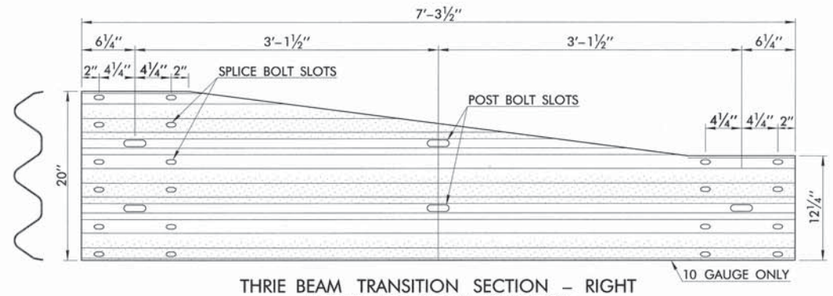

THRIE BEAM TRANSITION SECTION – RIGHT
(THRIE BEAM TO W-BEAM CONNECTION)

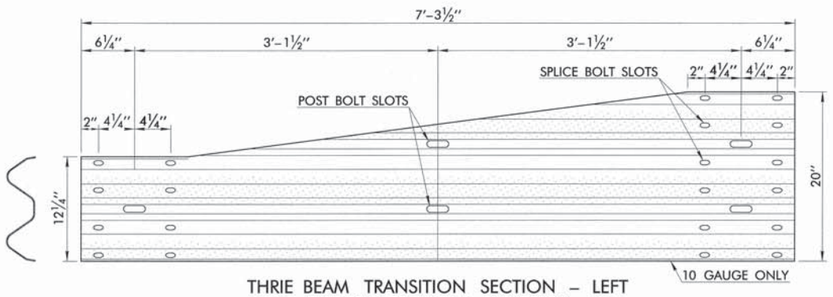

THRIE BEAM TRANSITION SECTION – LEFT
(THRIE BEAM TO W-BEAM CONNECTION)

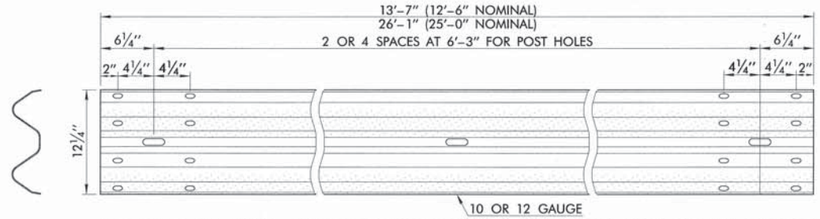

STANDARD W-BEAM GUARDRAIL ELEMENT (12'-6" OR 25'-0" NOMINAL LENGTH)

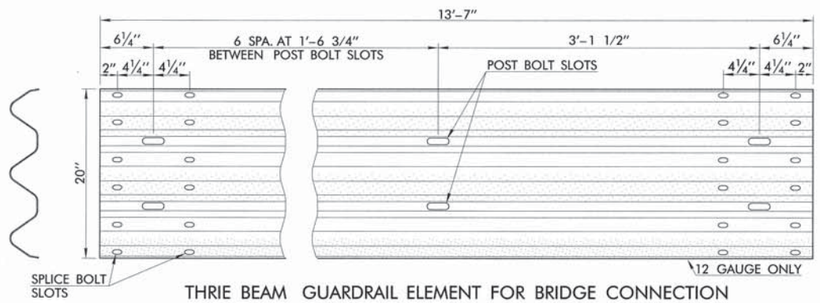

THRIE BEAM GUARDRAIL ELEMENT FOR BRIDGE CONNECTION

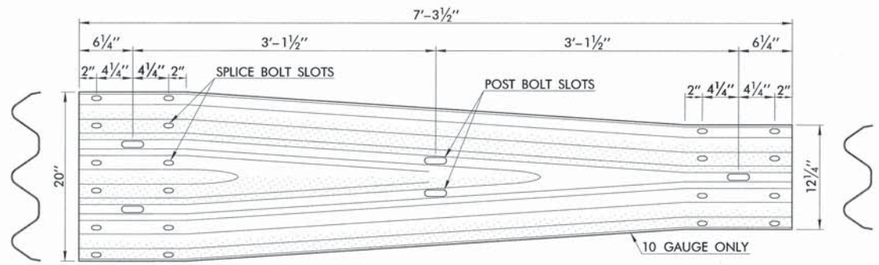

THRIE BEAM TRANSITION SECTION (6'-3" NOMINAL LENGTH)
(THRIE BEAM TO W-BEAM CONNECTION)

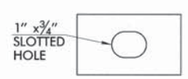

3" x 1 3/4" x 3/16" BEAM WASHER

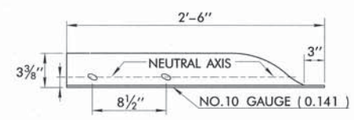

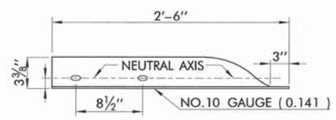

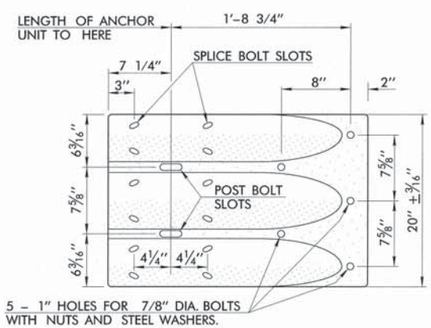

THRIE BEAM TERMINAL CONNECTION
10 GAUGE ONLY (END SHOE)

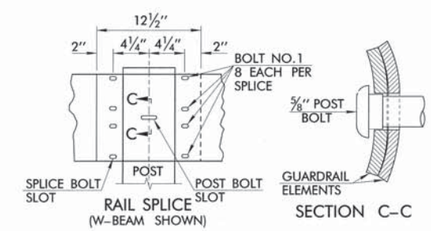

RAIL SPLICE
(W-BEAM SHOWN)

SECTION C–C

GUARDRAIL SHALL BE LAPPED IN THE DIRECTION OF NEAREST TRAFFIC AT ALL LOCATIONS WHERE SPLICES OCCUR (EXCEPT AT NARROW OR ONE LANE BRIDGE APPROACHES, WHERE LAPS SHALL BE TOWARD THE BRIDGE ON BOTH SIDES OF THE APPROACH ROADWAY).

RAIL SPLICE

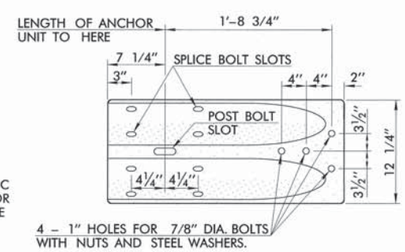

W-BEAM TERMINAL CONNECTION
(END SHOE)

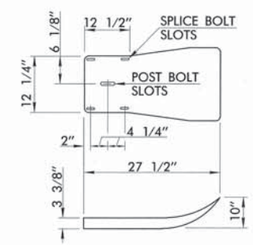

W-BEAM END SECTION (FLARED)

GENERAL NOTES

1. ALL CONSTRUCTION AND MATERIAL REQUIREMENTS SHALL BE IN ACCORDANCE WITH THE 2009 ODOT STANDARD SPECIFICATIONS.
2. ALL GUARDRAIL BEAMS, END SHOES, AND END SECTIONS ON THIS STANDARD DRAWING SHALL BE IN ACCORDANCE WITH AASHTO M 180.
3. ALL SPLICE BOLT SLOTS SHALL BE 29/32" WIDE x 1 1/8" LONG.
4. ALL POST BOLT SLOTS SHALL BE 3/4" WIDE x 2 1/2" LONG.

APPROVED BY TRAFFIC ENGINEER: DATE: 4/9/12

TRAFFIC MAINTENANCE STANDARD

GUARDRAIL AND HARDWARE
(2 OF 3)
(27 3/4" SYSTEM)

2009 SPECIFICATIONS

GRH2-1	00
	M-028

DESCRIPTION	REVISIONS	DATE

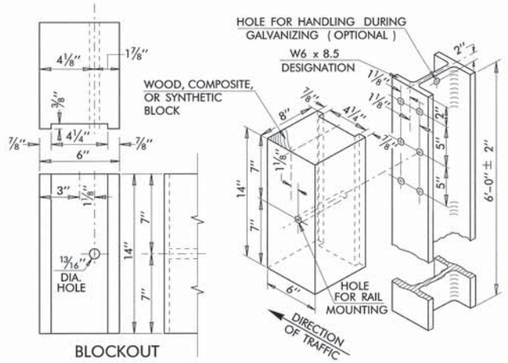

BLOCKOUT

STEEL POST & BLOCKOUT

FABRICATED STEEL BEAMS OF THE SAME BASIC DIMENSIONS AND BENDING PERFORMANCE WILL BE AN ACCEPTABLE ALTERNATE. ALL HOLES IN STEEL TO BE 13/16" DIAMETER AND SHALL BE PUNCHED OR DRILLED BEFORE GALVANIZING. USE BOLT NO. 5 TO MOUNT RAIL AND BLOCKOUT TO POST. SEE TABLE OF BOLTS ON THIS SHEET FOR DETAILS. POST UNIT TO BE GALVANIZED AFTER FABRICATION. ON INITIAL INSTALLATION, THE BLOCKOUT AND RAIL ELEMENT SHALL BE ATTACHED TO THE POST USING THE SINGLE HOLE IN THE POST AND BLOCKOUT (ONE BOLT IS REQUIRED). OTHER HOLES IN POST ARE FOR FUTURE VERTICAL ADJUSTMENT. BEAM WASHERS ARE NO LONGER USED.

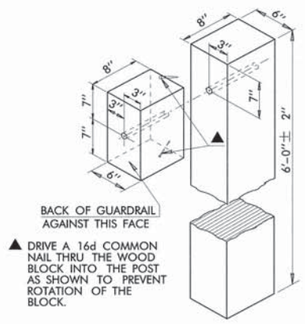

▲ DRIVE A 16d COMMON NAIL THRU THE WOOD BLOCK INTO THE POST AS SHOWN TO PREVENT ROTATION OF THE BLOCK.

WOOD POSTS & BLOCKOUT

ALL HOLES IN WOOD TO BE 3/4" IN DIAMETER AND DRILLED, AS SHOWN ON THE LONGITUDINAL CENTER OF THE 6" FACE AND TREATED WITH AN APPROVED PRESERVATIVE. ON INITIAL INSTALLATIONS, THE RAIL AND BLOCKOUT SHALL BE ATTACHED TO THE POST USING ONE BOLT NO. 2 THROUGH THE RAIL, THE CENTER HOLE IN THE BLOCKOUT AND THE BOTTOM HOLE IN THE THE POST.

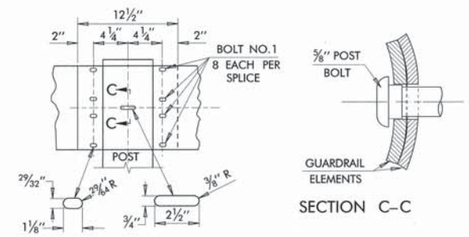

SECTION C–C

GUARDRAIL SHALL BE LAPPED IN THE DIRECTION OF NEAREST TRAFFIC AT ALL LOCATIONS WHERE SPLICES OCCUR (EXCEPT AT NARROW OR ONE LANE BRIDGE APPROACHES, WHERE LAPS SHALL BE TOWARD THE BRIDGE ON BOTH SIDES OF THE APPROACH ROADWAY).

RAIL SPLICE

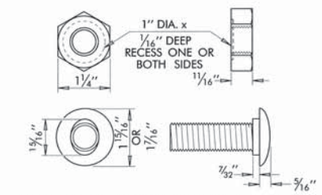

5/8" Ø BUTTON HEAD BOLT & RECESS NUT

ALTERNATE BUTTON HEAD BOLT

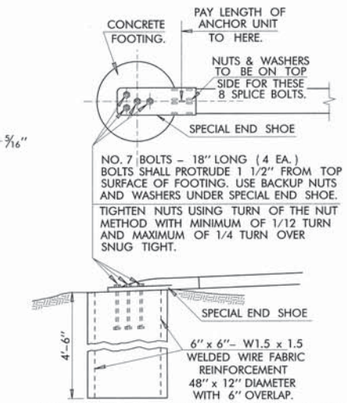

NO. 7 BOLTS – 18" LONG (4 EA.) BOLTS SHALL PROTRUDE 1 1/2" FROM TOP SURFACE OF FOOTING. USE BACKUP NUTS AND WASHERS UNDER SPECIAL END SHOE.

TIGHTEN NUTS USING TURN OF THE NUT METHOD WITH MINIMUM OF 1/12 TURN AND MAXIMUM OF 1/4 TURN OVER SNUG TIGHT.

CLASS A CONCRETE TO BE PLACED INTO 18" DIA. HOLE TO A DEPTH OF APPROX. 4'–6". SHAPE CONCRETE TO DRAIN OR FIT SLOPES. END SHOE MUST REMAIN LEVEL. CLASS A CONCRETE = 0.26 C.Y.

DETAIL OF CONCRETE & BOLTS USED IN ANCHOR

NOTE: PRECAST FOOTING (EQUIV. SIZE & DESIGN) MAY BE SUBSTITUTED FOR CAST–IN–PLACE FOOTING, IF APPROVED BY THE ENGINEER.

OPTIONAL TYPE POSTS OR BLOCKOUTS FOR STANDARD LINE GUARDRAIL

THE CONTRACTOR MAY, AT HIS OPTION, SELECT AND USE ONE OF THE TYPE POSTS SHOWN ABOVE. THIS POST & BLOCKOUT CHOICE MUST BE USED ON THE ENTIRE PROJECT. THE ONLY OBLIGATORY USE OF WOODPOST IS FOR POST NO. 1, AS SHOWN ON ANCHOR UNIT TYPE A. ALTERNATIVE POST & BLOCKOUT COMBINATIONS, INCLUDING RECYCLED MATERIAL, RUBBER, PLASTIC AND COMPOSITE PRODUCTS, MUST BE OF A TYPE WHICH PASSES NCHRP 350, TESTING LEVEL 3, BE SUBMITTED WITH FHWA CERTIFICATION AND BE APPROVED FOR USE BEFORE INSTALLATION.

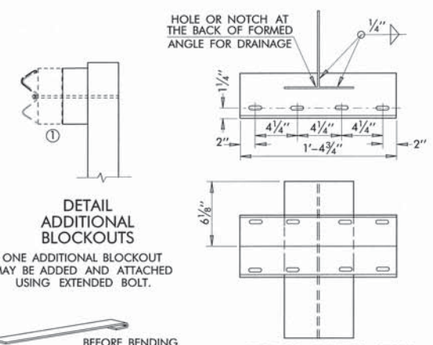

DETAIL ADDITIONAL BLOCKOUTS

① ONE ADDITIONAL BLOCKOUT MAY BE ADDED AND ATTACHED USING EXTENDED BOLT.

BRIDGE SPECIAL STEEL ANCHOR POST DETAIL

UNIT TO BE GALVANIZED AFTER FABRICATION

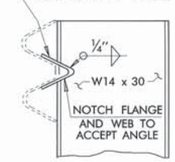

NOTE: GUARDRAIL COMPONENTS SHALL MEET THE APPLICABLE STD'S OF "A GUIDE TO STANDARDIZED HIGHWAY BARRIER RAIL HARDWARE" PREPARED AND APPROVED BY THE AASHTO-ARTBA-AGC JOINT COOPERATIVE COMMITTEE, TECHNICAL BULLETION NO. 268 B.

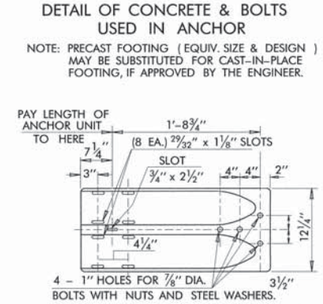

SPECIAL END SHOE

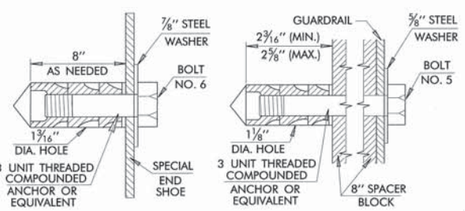

ANCHOR DEVICE (7/8" BOLT)

USE TO ANCHOR SPECIAL END SHOE TO BRIDGE PIER, BRIDGE CURB, OR TO CONCRETE PARAPET IN LIEU OF BOLTS THROUGH THE PARAPET.

ANCHOR DEVICE (5/8" BOLT)

USE WHERE CONNECTION IS MADE TO ROUND PIERS, AS IN TYPE C, G, OR GE UNIT.

EQUVALENT ANCHOR SYSTEM SPECIFICATIONS & DATA				
ANCHOR BOLT SIZE	BAR SIZE #	BAR DIA. (d) in.	BOND STRESS (u) psi	BOND CAPACITY (U) lb/in
1/2"	4	0.500	667	1048
5/8"	5	0.626	667	1310
3/4"	6	0.750	581	1369
	7	0.875	498	1369
	8	1.000	436	1369
1"	9	1.128	386	1369
	10	1.270	343	1369
1 1/4"	11	1.410	309	1369
1 1/2"	14	1.693	274	1457

ALTERNATIVE ANCHOR BOLT SYSTEMS MEETING THE MINIMUM STRENGTH REQUIREMENTS, AS SHOWN IN THE SPEC. & DATA TABLE ABOVE, MAY BE USED IN ATTACHMENT APPLICATIONS IN LIEU OF COMPOUND OR THROUGH BOLT ANCHORS IF APPROVED BY THE ENGINEER.

WHERE, T = U x L = PULL–OUT STRENGTH
U = BOND CAPACITY PER INCH
L = EMBEDMENT DEPTH IN INCHES

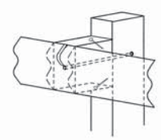

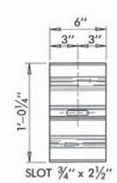

BACKUP CONNECTION PIECE (6")

12 GUAGE GALVANIZED STEEL W–BEAM 6" LONG BOLTED DIRECTLY (BEHIND THE RAIL ELEMENT) TO POST.

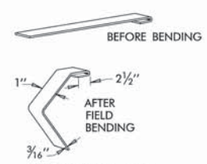

FASTENING CLIP

3/16" x 12" A36 (MILD) GALVANIZED STEEL PLATE FIELD SHAPED WITH A HAMMER FOR A TIGHT FIT. HOOK FITS OVER BACKUP CONNECTION PIECE AND GUARDRAIL ELEMENT TO FORM A WEAKENED CONNECTION. COAT WITH A ZINC–RICH GALVANIZATING PAINT AFTER BENDING.

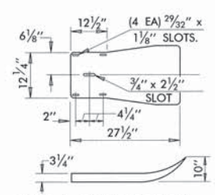

TYPE 1 END SECTION

TABLE OF BOLTS, NUTS, & WASHERS			
	ITEM	ASSEMBLY	NOMENCLATURE & DIMENSIONS
②	BOLT 1	RECESS NUT & SPECIFIED WASHER	5/8–11 UNC – 2A x 1 1/4" LONG BUTTON HEAD W/ OVAL SHOULDER.
②	BOLT 2	RECESS NUT & STEEL WASHER	5/8–11 UNC – 2A x 18" LONG BUTTON W/ OVAL SHOULDER.
②	BOLT 3	HEX NUT & LOCK WASHER	5/8–11 UNC – 2A x 1 1/2" LONG HEX–HEAD BOLT.
②	BOLT 4	RECESS NUT & 5/8" STEEL WASHER	5/8–11 UNC – 2A x ___" LONG BUTTON HEAD W/OVAL SHOULDER.
②	BOLT 5	5/8" STEEL WASHER & ANCHOR DEVICE	5/8–11 UNC – 2A x 10 1/2" LONG HEX–HEAD BOLT.
①②	BOLT 6	7/8" STEEL WASHER & ANCHOR DEVICE	7/8– 9 UNC – 2A x 8" LONG HEX–HEAD BOLT.
①③	BOLT 7	7/8" STEEL WASHER & 7/8" HEX NUT	7/8– 9 UNC – 2A x ___" LONG HIGH STRENGTH STL. HEX–HEAD BOLT
⑥	RECESS NUT		5/8–11 UNC – 2B SEMI–FINISHED.
⑥	5/8" HEX NUT		5/8–11 UNC – 2B SEMI–FINISHED.
①④	7/8"HEX NUT		7/8– 9 UNC – 2B SEMI–FINISHED.
⑤	5/8"STEEL WSHR.		11/16" x 1 3/4" x 0.141" TYPE A PLAIN WASHER.
⑤	7/8"STEEL WSHR.		15/16" x 2 1/4" x 0.156" TYPE A PLAIN WASHER.
①	LOCK WASHER		11/16" I.D. GALVANIZED STANDARD HARDWARE ITEM.

① NOT A STANDARD ITEM IN "A GUIDE TO STANDARIZED HIGHWAY BARRIER RAIL HARDWARE".TECHNICAL BULLETIN #268–B.
② SHALL MEET REQUIREMENTS OF A.S.T.M. A307 & A153.
③ SHALL MEET REQUIREMENTS OF A.S.T.M. A325 OR A449 & A153.
④ SHALL MEET REQUIREMENTS OF A.S.T.M. A153 & A563 GRADE B OR BETTER.
⑤ SHALL MEET REQUIREMENTS OF A.S.T.M. A153 & A.N.S.I. B27.2.
⑥ SHALL MEET REQUIREMENTS OF A.S.T.M. A153 & A563. GRADE A OR BETTER.

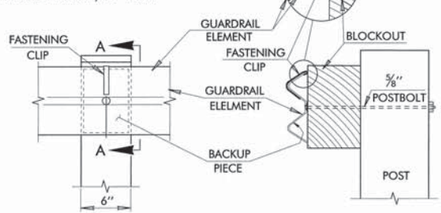

SECTION A–A

DETAIL OF WEAKENED CONNECTION

NOTE: WEAKENED CONNECTION TO BE USED ONLY WITH GUARDRAIL ANCHOR UNIT TYPE A.

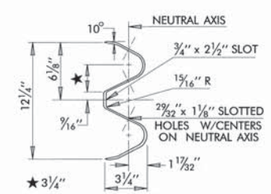

SECTION THRU 12 GAUGE STEEL RAIL ELEMENT

MAY VARY DUE TO TOLERANCES. NOMINAL THICKNESS OF 0.105", EXCLUSIVE OF PROTECTIVE COATING.

MATERIALS SHALL MEET THE REQUIREMENTS OF THE FOLLOWING SUBSECTIONS OF THE 2009 STD. SPEC'S.

PORTLAND CEMENT CONCRETE	701
REINFORCING STEEL	723
◀ G. RAIL POSTS & SPACER BLOCKS	727 & 732
METAL PLATE STEEL BEAM	732
FITTINGS	732
GALVANIZATION	732

ALL DIMENSIONS ARE SUBJECT TO MANUFACTURER'S TOLERANCE.

◀ WOOD POSTS SHALL MEET THE REQUIREMENTS OF STRESS GRADE 1200F OF SECTION 727.

BASIS OF PAYMENT		
ITEM NO.	ITEM	UNIT
623.06 (B)	BEAM GUARDRAIL (W–BEAM) SINGLE	L. F.

APPROVED BY TRAFFIC ENGINEER: David Gmaty DATE: 4/9/12

TRAFFIC MAINTENANCE STANDARD

GUARDRAIL AND HARDWARE (3 OF 3) (27¾" SYSTEM)

2009 SPECIFICATIONS

GRH3–1	00
	M–029

ALL GENERAL NOTES SHOWN BELOW SHALL APPLY
TO ALL OF THE STANDARD DRAWINGS IN TCS SERIES

REVISIONS	
DESCRIPTION	DATE
MODIFIED NOTES	3/15/2011

CONTRACTOR

ON CONSTRUCTION PROJECTS IT WILL BE THE CONTRACTORS RESPONSIBILITY TO INSTALL THE NECESSARY TRAFFIC CONTROL BEFORE CONSTRUCTION BEGINS.

THE CONTRACTOR SHALL BE RESPONSIBLE FOR MAINTAINING ALL DEVICES TO ASSURE A HIGH DEGREE OF BOTH DAY AND NIGHT VISIBILITY, WHICH WILL INCLUDE ANY WASHING, REPLACEMENT AND/OR REPOSITIONING WHERE DEEMED NECESSARY BY THE ENGINEER.

THE CONTRACTOR SHALL REPAIR OR REPLACE ANY NEW OR EXISTING PERMANENT STATE OWNED SIGNS WHICH ARE DAMAGED DUE TO HIS NEGLIGENCE OR CARELESS HANDLING DURING THE CONSTRUCTION OF THIS PROJECT. THIS SHALL BE DONE AT THE CONTRACTORS EXPENSE.

THE CONTRACTOR SHALL BE RESPONSIBLE FOR MAINTAINING TEMPORARY TRAFFIC CONTROL WORK ZONE AND EXISTING PAVEMENT MARKINGS ON ALL ROADWAYS OPEN TO TRAFFIC WITHIN THE PROJECT. SUFFICIENT QUANTITIES HAVE BEEN PROVIDED FOR MAINTAINING PAVEMENT MARKINGS FOR PRESCRIBED DETOUR ROUTES WHEN DEEMED NECESSARY BY THE ENGINEER.

SIGN MATERIALS

ALL SIGN BLANK MATERIALS SHALL BE THE OPTION OF THE CONTRACTOR BUT SHALL BE OF SUCH MATERIAL THAT WILL RETAIN A SATISFACTORY APPEARANCE THROUGHOUT THE LIFE OF THE PROJECT.

ALL SIGNS, LIGHTS, FLAGS, ETC. SHALL CONFORM IN SIZE, SHAPE, COLOR, LEGENDS AND APPLICATIONS TO THE STANDARDS SET FORTH IN THE MANUAL ON UNIFORM TRAFFIC CONTROL DEVICES AND/OR OKLAHOMA STATE STANDARD DRAWINGS FOR SIGNS. STANDARD DRAWINGS ARE AVAILABLE FROM THE DEPARTMENT OF TRANSPORTATION. INTERPRETATIONS THAT MAY BE NECESSARY SHALL BE REFERRED TO THE ENGINEER.

SIGN SHEETING

REFLECTORIZATION OF TRAFFIC CONTROL DEVICES SHALL BE BY MEANS OF WIDE ANGLE, FLAT TOP REFLECTIVE SHEETING MEETING THE REQUIREMENTS OF 2009, OKLAHOMA STANDARD SPECIFICATIONS.

SIGN INSTALLATION

ALL SIGNS SHALL BE SECURELY PLACED OR WEIGHTED TO PREVENT BLOWING OVER. ROCKS, BROKEN CONCRETE OR OTHER SUCH OBJECTS SHALL NOT BE CONSIDERED AN ACCEPTABLE SUBSTITUTE FOR SAND BAGS WHEN USED TO OBTAIN ADDED STABILITY FOR MOVABLE SIGNS AND BARRICADES.

SPACING OF SIGNING, ON THE PLANS OR TCS STANDARDS, SHOULD BE NO LESS THAN THE DISTANCES SHOWN. THE DISTANCE BETWEEN SIGNS SHOULD BE INCREASED ON HIGH SPEED OR MORE HEAVILY TRAVELED HIGHWAYS, OR WHERE SIGHT DISTANCE IS RESTRICTED.

IN ALL CONSTRUCTION ZONES, THE 48 INCH X 48 INCH WARNING SIGNS SHALL HAVE ATTACHED THERETO FLORESCENT FLAGS AND TYPE "A" WARNING LIGHTS. THIS SHALL ALSO APPLY WHEN SIGNS ARE USED ON BOTH SIDES OF THE ROADWAY. ADDITIONAL FLASHING LIGHTS MAY BE REQUIRED WHEN SO DESIRED BY THE ENGINEER.

ALL DIAMOND SHAPED CONSTRUCTION WARNING SIGNS ON EXPRESSWAYS OR FREEWAYS SHALL BE 48 INCH X 48 INCH, WITH THE APPROPRIATE ADVISORY SIGN WHERE REQUIRED UNLESS OTHERWISE NOTED IN THE PLANS.

DUE TO THE TEMPORARY NATURE OF CONSTRUCTION, SIGNS WHICH ARE 33 S.F. AND OVER WILL HAVE NO REINFORCING STEEL IN THEIR FOOTINGS.

ALL SIGNS AND SIGN ASSEMBLIES WITH A TOTAL SURFACE AREA OF 10 S.F. OR MORE SHALL BE INSTALLED ON TWO (2) POSTS. THE EXCEPTION BEING SINGLE ROUTE MARKER ASSEMBLIES.

SIGNS MOUNTED ON BARRICADES SHALL BE MOUNTED AS HIGH AS NECESSARY TO BE VISIBLE.

BARRICADES

ONE (1) WING BARRICADE SHALL BE SET ON EACH SIDE OF THE ROADWAY IN ADVANCE OF THE FIRST ADVANCE WARNING SIGN. THE EXCEPTIONS ARE MINOR CROSS STREETS AND SECTION LINE ROADS WHICH INTERSECT THE WORK AREA.

WING BARRICADES SHALL BE INSTALLED ON TWO (2) BREAKAWAY POSTS.

WORK DURATION

THE FIVE CATEGORIES OF WORK DURATION AND THIER TIME AT A LOCATION SHALL BE:
A) LONG-TERM STATIONARY IS WORK THAT OCCUPIES A LOCATION MORE THAN 3 DAYS.
B) INTERMEDIATE-TERM STATIONARY IS WORK THAT OCCUPIES A LOCATION MORE THAN ONE DAYLIGHT PERIOD UP TO 3 DAYS, OR NIGHTTIME WORKLASTING MORE THAN 1 HOUR.
C) SHORT-TERM STATIONARY IS DAYTIME WORK THAT OCCUPIES A LOCATION FOR MORE THAN 1 HOUR WITHIN A SINGLE DAYLIGHT PERIOD.
D) SHORT DURATION IS WORK THAT OCCUPIES A LOCATION UP TO 1 HOUR.
E) MOBILE IS WORK THAT MOVES INTERMITTENTLY OR CONTINUOUSLY.

LIGHTING

TYPE "A" WARNING LIGHTS SHALL BE USED ON BARRICADES (AS REQUIRED) AND WARNING SIGNS.

TYPE "C" WARNING LIGHTS MAY BE USED ON VERTICAL PANELS (OPTIONAL).

CONSTRUCTION NOTES

SHOULD THE REQUIRED WORK ON ANY PROJECT, INCLUDING ANY TRAFFIC CONTROL, OVERLAP OR OTHERWISE INTERFERE WITH THE ON-GOING WORK OR TRAFFIC CONTROL OF ANOTHER PROJECT, IT SHALL BE THE RESPONSIBILITY OF THE RESPECTIVE CONTRACTORS TO COORDINATE THEIR WORK ACTIVITIES TO FACILITATE THE SAFE MOVEMENT OF TRAFFIC THROUGHOUT OR AROUND THEIR COLLECTIVE WORK AREAS. ANY SUCH RECOMMENDED CHANGES SHALL BE SUBMITTED IN WRITING TO EACH PROJECT RESIDENT ENGINEER FOR REVIEW AND APPROVAL.

ALL TRAFFIC CONTROL DEVICES NOT REQUIRED FOR THE SAFE CONDUCT OF TRAFFIC THROUGH THE TEMPORARY TRAFFIC CONTROL ZONE SHALL BE PROMPTLY REMOVED, COMPLETELY COVERED, TURNED AWAY FROM TRAFFIC OR OTHERWISE TAKEN OUT OF SERVICE. DEVICES SHALL NOT BE STORED ALONG THE ROADWAY, WITHIN 15 FEET (15') OF AN OPEN DRIVING LANE, EITHER BEFORE OR AFTER THEY ARE TO BE USED UNLESS PROTECTED BY GUARDRAIL, BRIDGE RAIL, AND/OR BARRIERS INSTALLED FOR OTHER PURPOSES. THESE DEVICES SHALL BE REMOVED FROM THE TEMPORARY TRAFFIC CONTROL ZONE WHEN THE ENGINEER DETERMINES THEY ARE NO LONGER NEEDED. WHERE THERE IS INSUFFICIENT RIGHT-OF-WAY TO PROVIDE FOR THIS 15 FEET (15') SETBACK, THE CONTRACTOR SHALL DETERMINE ALTERNATE LOCATIONS AND REQUEST THE ENGINEERS APPROVAL TO USE THEM.

TRAFFIC CONTROL DEVICES, WARNING DEVICES, AND BARRIERS SHALL BE KEPT IN CORRECT POSITION, PROPERLY DIRECTED, CLEARLY VISIBLE AND CLEAN AT ALL TIMES. DAMAGED, DEFACED OR DIRTY DEVICES OR BARRICADES SHALL IMMEDIATELY BE REPAIRED, REPLACED OR CLEANED BY THE CONTRACTOR AND APPROVED FOR USE BY THE ENGINEER.

NO EQUIPMENT OR VEHICLES BELONGING TO THE CONTRACTOR, HIS SUB-CONTRACTORS OR EMPLOYEES SHALL BE PARKED OR STOPPED WITHIN 30 FEET (30') OF A LANE CARRYING TRAFFIC, AT ANY TIME, UNLESS REQUIRED BY ONGOING WORK OPERATIONS.

ALL DETOURS AND DIVERSIONS SHOULD BE IN PLACE, WITH SIGNING, STRIPING AND CHANNELIZING DEVICES, AS SHOWN IN THE PLANS OR STANDARD DRAWINGS. BEFORE THEY ARE OPENED TO TRAFFIC.

WHEN IT BECOMES NECESSARY TO CLOSE THE ROAD TO THROUGH TRAFFIC, NO LESS THAN SEVEN DAYS PRIOR TO THE CLOSURE, THE CONTRACTOR SHALL NOTIFY THE FOLLOWING INDIVIDUALS OR AGENCIES DESCRIBING THE AFFECTED ROAD AND THE APPROXIMATE DURATION OF THE CLOSURE. THOSE TO BE NOTIFIED INCLUDE BUT ARE NOT LIMITED TO 1) LOCAL LAW ENFORCEMENT OFFICIALS, 2) LOCAL FIRE OFFICIALS, 3) AMBULANCE SERVICES, 4) LOCAL SCHOOL SUPERINTENDENT, 5) UNITED STATES POSTAL SERVICE, AND 6) CITY OR COUNTY ROAD SUPERINTENDENT.

ALL TEMPORARY TRAFFIC CONTROL DEVICES, AND THIER CONDITIONS THROUGHOUT THE LIFE OF THE CONSTRUCTION PROJECT, SHALL MEET O.D.O.T.'S LATEST "QUALITY STANDARDS FOR TEMPORARY TRAFFIC CONTROL DEVICES". THE O.D.O.T. RESIDENT ENGINEER WILL MAKE FINAL DECISION OF ALL TEMPORARY TRAFFIC CONTROL DEVICES BASED ON THE O.D.O.T. GUIDELINES.

NO GENDER BIAS SIGNS ARE ALLOWED.

ARROW DISPLAY

USE OF AN ARROW DISPLAY, IN THE ARROW OR CHEVRON MODE, SHALL BE LIMITED TO STATIONARY OR MOVING LANE CLOSURES.

AN ARROW DISPLAY, IN THE CAUTION MODE, SHALL BE USED ONLY FOR SHOULDER WORK, BLOCKING THE SHOULDER, ROADSIDE WORK NEAR THE SHOULDER, OR FOR MOBILE OPERATIONS (I.E. STRIPING).

AN ARROW DISPLAY IN THE ARROW OR CHEVRON MODE, SHALL NOT BE USED ON A TWO-LANE, TWO-WAY ROADWAY FOR TEMPORARY ONE-LANE OPERATION.

AN ARROW DISPLAY SHALL NOT BE USED ON A MULTI-LANE ROADWAY TO LATERALLY SHIFT TRAFFIC.

CHANNELIZING DEVICES

IN THOSE AREAS WHERE DRIVERS ARE ASKED TO MAKE A DECISION OR MUST BE GUIDED THROUGH A PRECISE MOVEMENT, BY USE OF CHANNELIZING DEVICES, IT IS ESPECIALLY IMPORTANT TO PROVIDE A CLEARLY DEFINED PATH. EXAMPLES OF THIS COULD BE IN DELINEATING A TEMPORARY GORE OR TURNING RADIUS. IN SUCH AREAS THE SPACING OF CHANNELIZING DEVICES MAY BE REDUCED TO 10 FEET FOR SPEEDS OF 40 M.P.H. OR LESS, AND 20 FEET FOR SPEEDS GREATER THAN 40 M.P.H.

WHEN CHANNELIZING DEVICES ARE USED TO DIRECT TRAFFIC ACROSS EXISTING LANE LINES OR EDGE LINES, THE SPACING BETWEEN CHANNELIZING DEVICES SHALL BE REDUCED 50%. SPACING SHOULD ALSO BE REDUCED WHEN CHANNELIZING DEVICES ARE PLACED ON CURVES, HILLS, OR NEXT TO POTENTIAL HAZARDS.

ALL TRAFFIC CONTROL CHANNELIZING DEVICES SHALL MEET MUTCD COLOR REQUIREMENTS.

FLAGGERS

FLAGGERS MUST BE CLEARLY VISIBLE TO APPROACHING TRAFFIC FOR A DISTANCE SUFFICIENT TO PERMIT PROPER RESPONSE BY MOTORISTS TO THE FLAGGING INSTRUCTIONS, AND TO PERMIT TRAFFIC TO REDUCE SPEED OR STOP BEFORE ENTERING THE TEMPORARY TRAFFIC CONTROL ZONE. FLAGGERS SHALL BE POSITIONED TO MAINTAIN MAXIMUM COLOR CONTRAST BETWEEN THE FLAGGER'S REFLECTIVE CLOTHING AND EQUIPMENT AND THE WORK AREA BACKGROUND.

DURING HOURS OF DARKNESS, FLAGGER STATIONS SHALL BE ILLUMINATED SUCH THAT THE FLAGGER WILL BE CLEARLY VISIBLE TO APPROACHING TRAFFIC. LIGHTS TO BE USED FOR ILLUMINATING THE STATION SHALL BE APPROVED BY THE ENGINEER. REFLECTORIZED PADDLES AND REFLECTORIZED VESTS, SHIRTS OR JACKETS SHALL BE USED FOR NIGHTTIME FLAGGING.

UNLESS OTHERWISE SPECIFIED IN THE PLANS, THE COST OF FLAGGING OPERATIONS SHALL BE INCLUDED IN OTHER ITEMS OF WORK.

MINIMUM STANDARDS FOR TRAFFIC CONTROL DEVICES

(1) WARNING LIGHTS (TYPE A FLASHERS AND TYPE C STEADY BURN)
- (A) NOT LESS THAN NINETY (90) PERCENT OF THE TOTAL NUMBER OF LIGHTS BEING USED AT ANY ONE TIME SHALL BE FULLY OPERATIONAL.
- (B) NOT MORE THAN THREE (3) LIGHTS ADJACENT TO ONE ANOTHER SHALL BE FAILING.

(2) ARROW DISPLAY
- (A) WHEN IN ARROW MODE, NO MORE THAN TWO (2) LAMPS IN THE STEM AND ZERO (0) LAMPS IN THE HEAD SHALL BE FAILING. THE DIMMING FUNCTION SHALL BE OPERATING PROPERLY.
- (B) WHEN IN CAUTION MODE (CORNERS), A MINIMUM OF FOUR (4) LAMPS SHALL BE OPERATIONAL. THE DIMMING FUNCTION SHALL BE OPERATING PROPERLY.
- (C) ANY LAMP WHICH IS LIGHTED BUT IMPROPERLY ALIGNED SHALL NOT BE CONSIDERED OPERATIONAL.

(3) CHANGEABLE MESSAGE SIGNS
- (A) NOT LESS THAN NINETY (90) PERCENT OF THE PIXELS SHALL BE FUNCTIONAL IN EACH CHARACTER MODULE.
- (B) NO SANDBAG BALLASTING OVER 3 FEET IN HEIGHT.

(4) PAVEMENT MARKING TAPE
- (A) NOT MORE THAN TEN (10) PERCENT OF ALL TAPE, PAINT, MESSAGE OR SYMBOL SHALL BE MISSING
- (B) NOT MORE THAN TWO (2) CONSECUTIVE DASHED LINES SHALL BE MISSING.
- (C) NOT MORE THAN FIFTY (50) CONTINUOUS FEET OF A SOLID LINE SHALL BE MISSING.

(5) CONSTRUCTION ZONE PAVEMENT MARKERS
- (A) NOT MORE THAN TEN (10) PERCENT OF THE TOTAL NUMBER OF MARKERS SHALL BE MISSING.
- (B) NOT MORE THAN THREE (3) CONSECUTIVE MARKERS SHALL BE MISSING.

STRIPING

WHENEVER THE WORK CAUSES THE OBLITERATION OF PAVEMENT MARKINGS, EITHER TEMPORARY OR PERMANENT MARKINGS SHALL BE IN PLACE PRIOR TO OPENING THE ROADWAY TO TRAFFIC. CENTERLINE PAVEMENT MARKINGS SHALL BE PROVIDED AT ALL TIMES FOR ROADWAYS OPEN TO TRAFFIC.

THE APPLICATION SURFACES FOR PAVEMENT MARKINGS SHALL BE FREE OF DUST, DIRT, MOISTURE OR OTHER FOREIGN MATTER WHICH WOULD INTERFERE WITH ADHESION. INSTALLATION OF ALL PAVEMENT MARKINGS SHALL BE IN ACCORDANCE WITH THE MANUFACTURERS RECOMMENDATIONS.

ALL TEMPORARY PAVEMENT MARKINGS SHALL BE REMOVED IMMEDIATELY AHEAD OF THE PERMANENT STRIPING OPERATIONS OR RE-STRIPING FOR FOLLOWING CONSTRUCTION PHASES.

WHEN REMOVABLE PAVEMENT MARKINGS TAPE IS TO BE INSTALLED ON NEW CONCRETE PAVEMENT, THE CURING COMPOUND SHALL BE REMOVED PRIOR TO INSTALLATION.

IF REMOVABLE PAVEMENT MARKING TAPE IS INSTALLED IN ACCORDANCE WITH THE MANUFACTURERS SPECIFICATIONS AND FAILS DURING THE FIRST SIX MONTHS OF SERVICE, IT SHALL BE REPLACED AT THE CONTRACTOR'S EXPENSE. REPLACEMENT SHALL BE ACCOMPLISHED IN A TIMELY MANNER UPON BEING NOTIFIED, BY THE ENGINEER, OF SUCH FAILURE.

PILOT CAR

WHEN LANE CLOSURES ARE REQUIRED ON TWO-LANE / TWO-WAY ROADWAYS, THE CONTRACTOR MAY, AT HIS OPTION, UTILIZE A PILOT CAR. IF THE CONTRACTOR ELECTS TO USE A PILOT CAR, CHANNELIZING DEVICES ALONG THE CENTERLINE WILL NOT BE REQUIRED. THE PILOT CAR OPERATOR SHALL BE IN RADIO CONTACT WITH PERSONNEL IN THE TEMPORARY TRAFFIC CONTROL ZONE. MAXIMUM SPEED OF THE PILOT CAR THROUGH THE WORK AREA SHALL BE 25 M.P.H. FULL COMPENSATION FOR FURNISHING AND OPERATING THE PILOT CAR, (INCLUDING DRIVER, RADIOS, AND ANY OTHER EQUIPMENT OR LABOR REQUIRED) SHALL BE CONSIDERED AS INCLUDED IN THE COST OF OTHER ITEMS OF WORK.

MISCELLANEOUS

TRAFFIC CONDITIONS MAY NECESSITATE CHANGES IN THE USE AND/OR QUANTITIES OF THE TRAFFIC CONTROL DEVICES AS SHOWN IN THE PLANS OR IN THE STANDARDS. ANY SUCH CHANGES ARE SUBJECT TO APPROVAL BY THE ENGINEER.

ALL CHANNELIZING DEVICES PROVIDED ON THIS PROJECT SHALL BE IN GOOD CONDITION AND SHALL BE APPROVED FOR USE ON THIS PROJECT BY THE ENGINEER.

THE REGULATORY SPEED LIMITS THROUGH THE WORK ZONE MAY BE ADJUSTED AT THE DISCRETION OF THE ENGINEER WITH THE DOCUMENTED APPROVAL OF THE DIVISION ENGINEER IN ACCORDANCE WITH TITLE 47 OF THE OKLAHOMA MOTOR VEHICLE LAWS.

THE TERMINATION AREA EXTENDS FROM THE DOWNSTREAM END OF THE WORK AREA TO THE TEMPORARY TRAFFIC CONTROL DEVICE SUCH AS "END ROAD WORK" SIGNS, IF POSTED. A SPEED SIGN, OR OTHER SIGNS MAY BE USED TO INFORM ROAD USERS THAT THEY CAN RESUME NORMAL OPERATIONS.

THE CONSTRUCTION SIGNING AND BARRICADE CONTRACTOR SHOULD AFFIX THEIR COMPANY NAME AND/OR LOGO INCONSPICUOUSLY ON EACH TRAFFIC CONTROL DEVICE.

APPROVED BY
TRAFFIC ENGINEER: DATE: 3/21/11

TRAFFIC STANDARD
TRAFFIC CONTROL STANDARD
TRAFFIC CONTROL CONSTRUCTION NOTES

2009 SPECIFICATIONS

TCS1-1	01
	T-501

$$date$$

DESCRIPTION	REVISIONS	DATE

TAPER LENGTH CRITERIA FOR WORK ZONES

SPEED LIMIT M.P.H.	"L" FORMULA	"L" TAPER LENGTH (MINIMUM) (FT)			NUMBER OF CHANNELIZING DEVICES REQUIRED (MINIMUM)			SPACING CHANNELIZING DEVICES (MAXIMUM)		MAXIMUM HORIZONTAL ALIGNMENT THRU DETOUR (DEGREE) (S=0)	SPEED LIMIT M.P.H.
		10' OFFSET	11' OFFSET	12' OFFSET	10' OFFSET	11' OFFSET	12' OFFSET	① THRU TAPER SECTION (FT.)	② THRU TANGENT SECTION (FT.)		
20	$L = \frac{W \times S^2}{60}$	70	75	80	5	5	5	20	40	—	20
25		105	115	125	6	6	6	25	50	—	25
30		150	165	180	6	7	7	30	60	15	30
35		205	225	245	7	8	8	35	70	11	35
40		265	295	320	8	9	9	40	80	8	40
45	$L = W \times S$	450	495	540	11	12	13	45	90	6	45
50		500	550	600	11	12	13	50	100	5	50
55		550	605	660	12	14	15	50	100	4	55
60		600	660	720	13	15	16	50	100	3	60
65		650	715	780	14	16	17	50	100	2.5	65
70		700	770	840	15	17	18	50	100	2	70
75		750	825	900	16	18	19	50	100	1.8	75

NOTES:

① RECOMMENDED SIGNING TO BE USED THRU LANE TAPER IS (1) CW1-8 ON EVERY OTHER DRUM.

② RECOMMENDED SIGNING TO BE USED THRU TANGENT LANES IS (1) R4-7A(R) OR (1) R4-7A(L) (AS APPLIES) ON EVERY OTHER DRUM.

L = TAPER LENGTH IN FEET

W = WIDTH OF OFFSET IN FEET

S = POSTED SPEED OR OFF-PEAK 85 PERCENTILE SPEED IN MPH

TYPE OF TAPER	TAPER LENGTH
UPSTREAM TAPERS	
MERGING TAPER	L MINIMUM
SHIFTING TAPER	1/2 L MINIMUM
SHOULDER TAPER	1/3 L MINIMUM
TWO-WAY TRAFFIC TAPER	100 FEET MAXIMUM
DOWNSTREAM TAPERS (USE IS OPTIONAL)	100 FEET PER LANE

FLARE RATES FOR CONCRETE MEDIAN BARRIER IN TEMPORARY TRAFFIC CONTROL ZONES

SPEED *	FLARE RATE (MINIMUM)
40 M.P.H.	9 TO 1
45 M.P.H.	10 TO 1
50 M.P.H.	11 TO 1
55 M.P.H.	12 TO 1
60 M.P.H.	13 TO 1
65 M.P.H.	14 TO 1
70 M.P.H.	15 TO 1
75 M.P.H.	16 TO 1

* POSTED SPEED LIMIT PRIOR TO CONSTRUCTION

PAVEMENT MARKINGS THROUGH TEMPORARY TRAFFIC CONTROL ZONE

	DRIVING SURFACE	FLEX TAB MARKERS	TAPE (REMOVABLE)	TAPE (NON-REMOVABLE)	PAINT	CONSTRUCTION ZONE PAVEMENT MARKERS
ASPHALT	EXISTING PAVEMENT TO BE REMOVED OR OVERLAYED IN THE NEXT PHASE	X	X	X	X	X
	EXISTING PAVEMENT TO BE LEFT IN PLACE THRU THE NEXT PHASE	X	X			X
	INTERMEDIATE LIFT	X	X	X	X	X
	MILLED SURFACE	X	X	X	X	X
	FINAL LIFT	X	X			
CONCRETE	EXISTING PAVEMENT TO BE REMOVED OR OVERLAYED IN THE NEXT PHASE	X	X	X	X	X
	EXISTING PAVEMENT TO BE LEFT IN PLACE THRU THE NEXT PHASE	X	X			X
	FINAL SURFACE	X	X		X	X

NOTE:
USE OF NON-REMOVABLE TAPE (FOILBACK) SHALL BE LIMITED TO THOSE CONDITIONS SHOWN IN THE TABLE.

RECOMMENDED CLEAR ZONE DISTANCE (FT) (CONSTRUCTION WORK ZONES)

DESIGN SPEED	DESIGN ADT	FILL SLOPES			CUT SLOPES		
		6:1 OR FLATTER	5:1 OR 4:1	3:1	3:1	4:1 OR 5:1	6:1 OR FLATTER
40 MPH OR LESS	UNDER 750	4	4	SEE NOTE 3	4	4	4
	750-1500	5	6		5	5	5
	1500-6000	6	7		6	6	6
	OVER 6000	7	8		7	7	7
45-50 MPH	UNDER 750	5	6		4	4	5
	750-1500	7	8		5	6	7
	1500-6000	8	10		6	7	8
	OVER 6000	10	12		7	9	10
55 MPH	UNDER 750	6	7		4	5	5
	750-1500	8	10		5	7	8
	1500-6000	10	12		7	8	10
	OVER 6000	11	13		8	10	11
60 MPH	UNDER 750	8	10		5	6	7
	750-1500	10	13		6	8	10
	1500-6000	13	16 *		7	9	12
	OVER 6000	15	18 *		10	12	13
65-70 MPH	UNDER 750	9	10		5	7	7
	750-1500	12	14		6	9	10
	1500-6000	14	17 *		8	11	13
	OVER 6000	15	19 *		11	13	14

NOTES:

* THE CLEAR ZONE MAY BE LIMITED TO 15 FEET FOR PRACTICALITY AND TO PROVIDE A CONSISTENT ROADWAY TEMPLATE.

(1) ALL DISTANCES ARE MEASURED FROM EDGE OF THE TRAVEL LANE.

(2) FOR CLEAR ZONES, THE "DESIGN ADT" WILL BE THE TOTAL ADT ON TWO-WAY ROADWAYS AND DIRECTIONAL ADT ON ONE-WAY ROADWAYS (E.G., RAMPS AND ONE ROADWAY OF A DIVIDED HIGHWAY).

(3) FILL SLOPES WHICH ARE 3:1 OR STEEPER ARE CRITICAL AND MAY REQUIRE A BARRIER. THEREFORE THERE IS NOT A CLEAR ZONE APPLICATION.

STOPPING SIGHT DISTANCE AS A FUNCTION OF SPEED

SPEED * (MPH)	LENGTH (FEET)
20 M.P.H.	115
25 M.P.H.	155
30 M.P.H.	200
35 M.P.H.	250
40 M.P.H.	305
45 M.P.H.	360
50 M.P.H.	425
55 M.P.H.	495
60 M.P.H.	570
65 M.P.H.	645
70 M.P.H.	730
75 M.P.H.	820

* POSTED SPEED, OFF-PEAK 85th PERCENTILE SPEED PRIOR TO WORK STARTING, OR THE ANTICIPATED OPERATING SPEED.

CROSSOVER CRITERIA FOR WORK ZONES

WIDTH OF MEDIAN (W) (FT)	LATERAL SHIFT - (P) (FT)	LENGTH OF CROSSOVER - LC * (FT)									
		V.	30 M.P.H.	35 M.P.H.	40 M.P.H.	45 M.P.H.	50 M.P.H.	55 M.P.H.	60 M.P.H.	65 M.P.H.	70 M.P.H.	75 M.P.H.
		D.	15°	11°	8°	6°	5°	4°	3°	2.5°	2°	1.8°
		R.	382	521	716	955	1146	1433	1910	2292	2865	3183
20	32		219	256	301	348	382	427	493	541	605	637
30	42		250	293	344	398	437	489	565	619	692	730
40	52		277	325	382	443	485	543	628	688	770	812
50	62		301	354	417	483	529	593	685	751	841	886
60	72		324	381	448	519	570	638	738	809	905	955
70	82		344	405	478	554	608	681	787	863	966	1,018
80	92		363	428	505	586	643	720	833	914	1,023	1,078
90	102		381	450	531	616	676	758	877	962	1,076	1,135
100	112		398	470	555	644	708	793	918	1,007	1,127	1,189
110	122		414	489	578	672	738	827	958	1,050	1,176	1,240
120	132		429	508	601	698	767	860	995	1,092	1,223	1,290

* CROSSOVER = REVERSE CURVE CONNECTION TYING TWO (2) PARALLEL ROADWAYS.

RECOMMENDED DISTANCE BETWEEN SIGNS (MIN.)

ROAD TYPE	A (FT)	B (FT)	C (FT)
URBAN (LOW SPEED)	100	100	100
URBAN (HIGH SPEED)	350	350	350
RURAL	500	500	500
EXPRESSWAY /FREEWAY	1,000	1,500	2,640

APPROVED BY TRAFFIC ENGINEER: David Smith DATE: 6/23/10

TRAFFIC STANDARD

TRAFFIC CONTROL STANDARD

TRAFFIC CONTROL TABLES AND CHARTS

2009 SPECIFICATIONS

TCS2-1	00
	T-502

REVISIONS	
DESCRIPTION	DATE
CHANGED TRANSITION NOTATION	5/31/2011

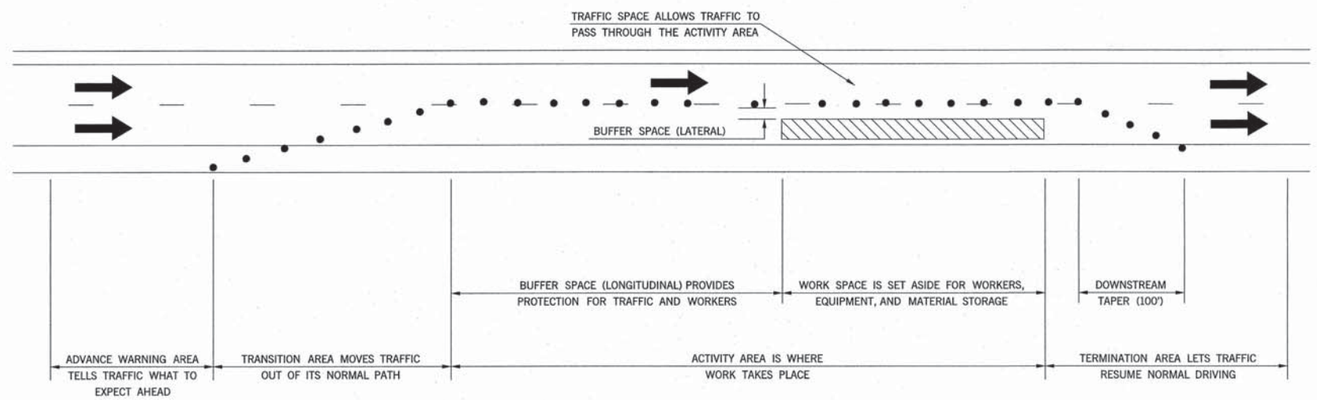

COMPONENT PARTS OF A TEMPORARY TRAFFIC CONTROL ZONE

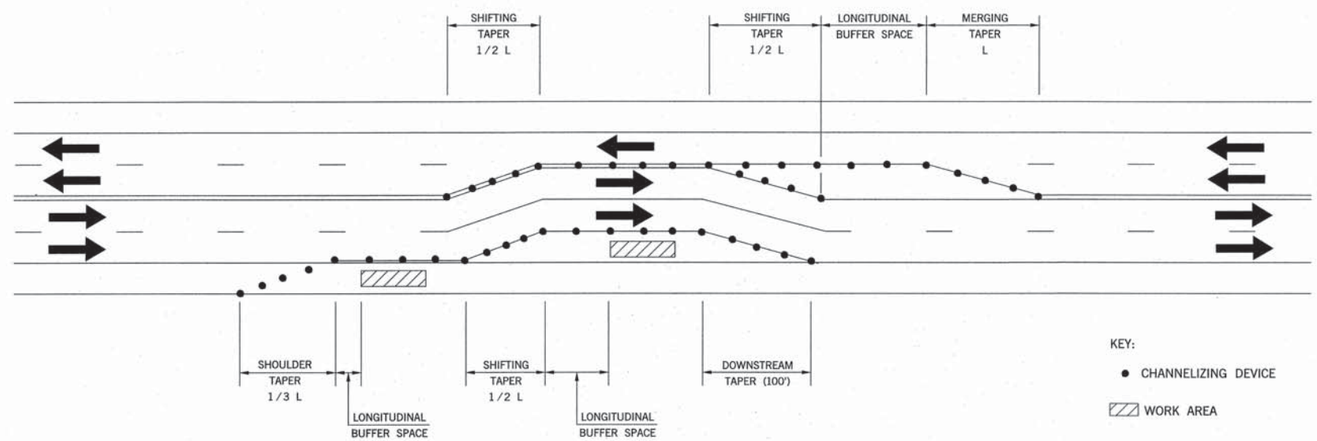

TAPERS AND BUFFER SPACE

TEMPORARY TRAFFIC CONTROL ELEMENTS

APPROVED BY TRAFFIC ENGINEER: DATE: 5/31/2011

TRAFFIC STANDARD

TRAFFIC CONTROL STANDARD
TEMPORARY TRAFFIC CONTROL ELEMENTS

2009 SPECIFICATIONS

TCS3-1	01
	T-503

$$date$$

REVISIONS	
DESCRIPTION	DATE
CHANGED TYPE "C" LIGHT TO OPTIONAL	3/15/2011

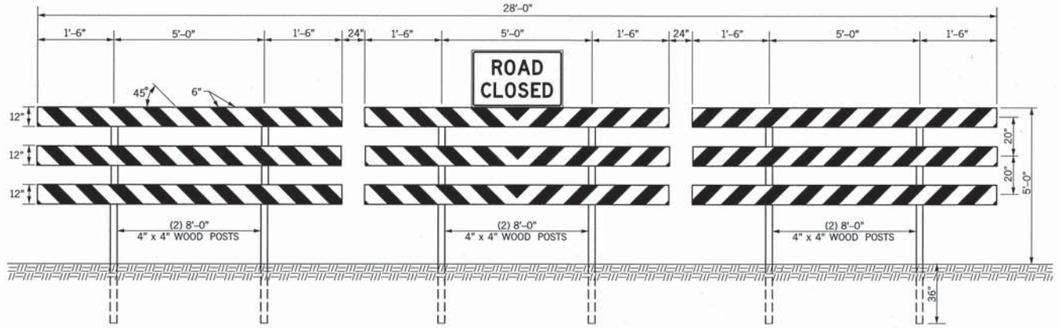

WHEN ROAD ENDS

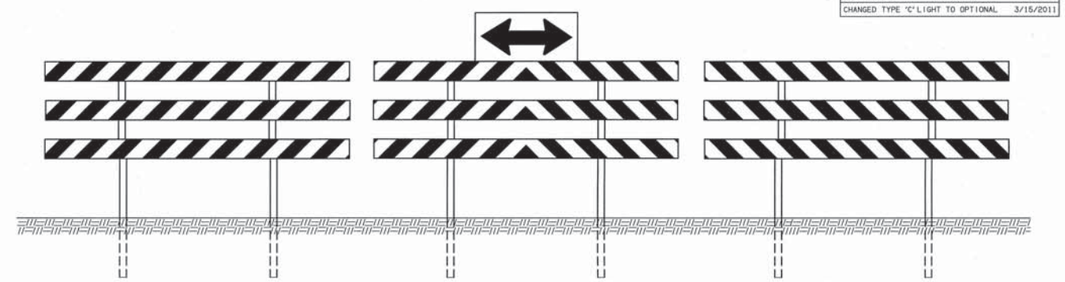

FOR T-INTERSECTIONS

PERMANENT TYPE III(A/B) BARRICADE

(DIMENSIONS ARE TYPICAL FOR BOTH BARRICADES)

NOTES: A PERMANENT BARRICADE TYPE III(A) SHALL CONSIST OF NINE (9) PANELS AND SIX (6) POSTS.

TYPICAL INSTALLATION AS SHOWN IS FOR AN ABSOLUTE CLOSURE.

BARRICADES SHOULD NOT BE PLACED PARALLEL TO TRAFFIC IF NOT OUTSIDE OF CLEAR ZONE.

PERMANENT BARRICADE TYPE III(B) WILL BE IDENTICAL TO TYPE III(A) WITH NINE (9) ADDITIONAL REFLECTORIZED 3/4"x12" LUMBER PANELS ATTACHED TO THE BACK SIDE OF THE BARRICADE.

COLOR: BACKGROUND – WHITE (REFLECTORIZED)
DIAGONAL STRIPES – RED (REFLECTORIZED)

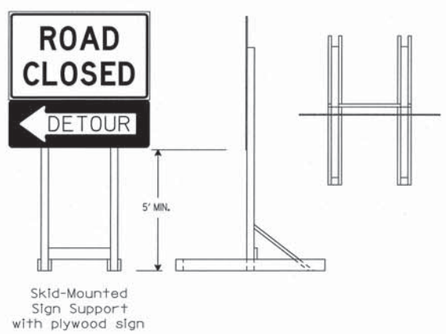

LONG/INTERMEDIATE TERM STATIONARY PORTABLE SIGN SUPPORTS

5 Foot Mounting Height

(SKID MOUNTED)

(SHALL BE PLACED BEHIND TYPE III BARRICADE)

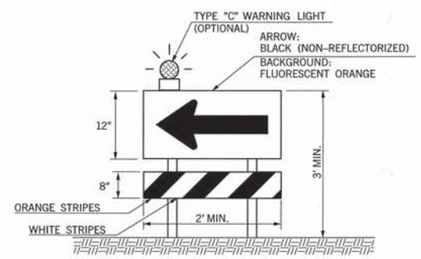

DIRECTION INDICATOR BARRICADE

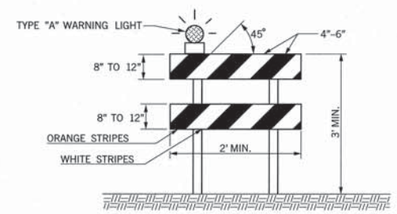

TYPE II BARRICADE

NOTES: FOR WOODEN BARRICADES NOMINAL LUMBER DIMENSIONS WILL BE SATISFACTORY.

FOR RAILS LESS THAN 3 FEET LONG, 4 INCH WIDE STRIPES SHALL BE USED.

TYPE III BARRICADES SHALL BE CONSTRUCTED USING A MINIMUM OF TWO (2) POSTS.

FOR WOODEN BARRICADES, PANEL THICKNESS SHALL NOT EXCEED ONE-HALF INCH (1/2").

BARRICADES SHOULD NOT BE PLACED PARALLEL TO TRAFFIC IF NOT OUTSIDE OF CLEAR ZONE.

PROJECTS WITH WORK LIMITS OF 2.0 MILES OR MORE IN LENGTH WILL REQUIRE THE G20-1A SIGN. THE SIGN (G20-1A) WILL BE REQUIRED ON ONE SIDE OF A 2-LANE ROADWAY AND BOTH SIDES OF A DIVIDED HIGHWAY.

ALL BARRICADE STRIPES SHALL BE RETROREFLECTIVE.

COLOR: BACKGROUND – WHITE (REFLECTORIZED)
DIAGONAL STRIPES – FLUORESCENT ORANGE (REFLECTORIZED)

IF BARRICADES ARE USED TO CHANNELIZE PEDESTRIANS, THERE SHALL BE CONTINUOUS DETECTABLE BOTTOM AND TOP RAILS WITH NO GAPS BETWEEN INDIVIDUAL BARRICADES TO BE DETECTABLE TO USERS OF LONG CANES. THE BOTTOM OF THE BOTTOM RAIL SHALL BE NO HIGHER THAN 6 INCHES ABOVE THE GROUND SURFACE. THE TOP OF THE TOP RAIL SHALL BE NO LOWER THAN 36 INCHES ABOVE THE GROUND SURFACE.

SIGNS MOUNTED ON TYPE III BARRICADES SHOULD NOT COVER MORE THAN 50 PERCENT OF THE TOP TWO RAILS OR 33 PERCENT OF THE TOTAL AREA OF THE THREE RAILS

SIGNS MOUNTED ON BARRICADES, OR OTHER PORTABLE SUPPORTS, SHALL BE NO LESS THAN 1' ABOVE THE TRAVELED WAY.

SANDBAGS MAY BE PLACED ON LOWER PARTS OF THE FRAME OR THE STAYS OF BARRICADES TO PROVIDE THE REQUIRED BALLAST.

BALLAST SHALL NOT BE PLACED ON TOP OF ANY STRIPED RAIL. BARRICADES SHALL NOT BE BALLASTED BY NONDEFORMABLE OBJECTS SUCH AS ROCKS OR CHUNKS OF CONCRETE. BALLAST SHALL NOT EXTEND INTO THE ACCESSIBLE PASSAGE WIDTH OF 60".

DIRECTION INDICATOR BARRICADE SHALL CONSIST OF A ONE-DIRECTION LARGE ARROW (W1-6) SIGN MOUNTED ABOVE A DIAGONAL STRIPED, HORIZONTALLY ALIGNED, RETRO-REFLECTIVE RAIL.

WHERE BARRICADES EXTEND ENTIRELY ACROSS A ROADWAY, THE STRIPES SHOULD SLOPE DOWNWARD IN THE DIRECTION TOWARD WHICH ROAD USERS MUST TURN.

WHERE BOTH RIGHT AND LEFT TURNS ARE PROVIDED, THE BARRICADE STRIPES SHOULD SLOPE DOWNWARD IN BOTH DIRECTIONS FROM THE CENTER OF THE BARRICADE OR BARRICADES.

WHERE NO TURNS ARE INTENDED, THE STRIPES SHOULD BE POSITIONED TO SLOPE DOWNWARD TOWARD THE CENTER OF THE BARRICADE OR BARRICADES.

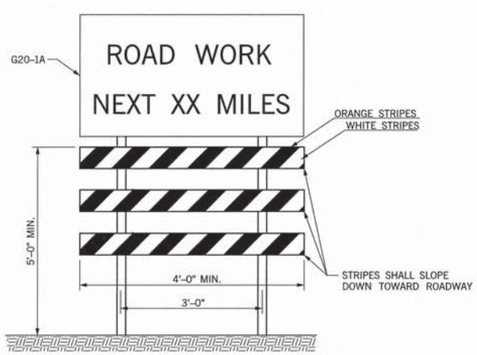

WING BARRICADE

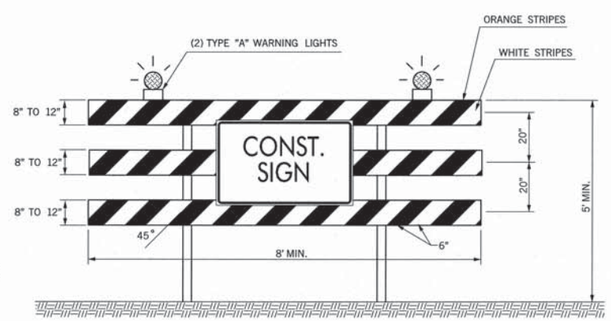

TYPE III BARRICADE

BASIS OF PAYMENT		
ITEM NO.	ITEM	UNIT
880(B)	CONSTRUCTION SIGNS	SD
880(C)	CONSTRUCTION BARRICADES	SD
880(E)	WARNING LIGHTS	SD

APPROVED BY
TRAFFIC ENGINEER: [signature] DATE: 3/21/11

TRAFFIC STANDARD

TRAFFIC CONTROL STANDARD
TRAFFIC CONTROL DEVICES

2009 SPECIFICATIONS

TCS4-1	01
	T-504

$$date$$

DESCRIPTION	REVISIONS	DATE

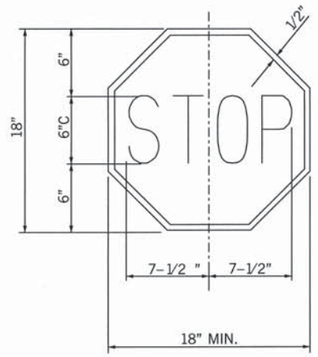

STOP:
LEGEND AND BORDER: WHITE (REFLECTORIZED)
BACKGROUND: RED (REFLECTORIZED)

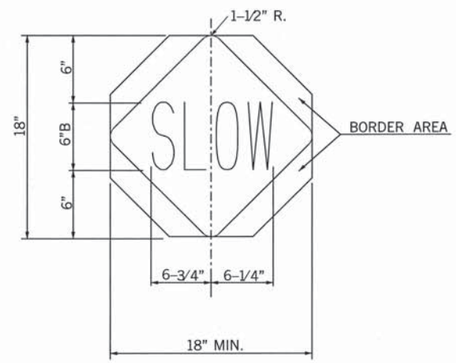

SLOW:
LEGEND AND BORDER AREA: BLACK (NON-REFLECTORIZED)
BACKGROUND: ORANGE (REFLECTORIZED)

STOP–SLOW PADDLE

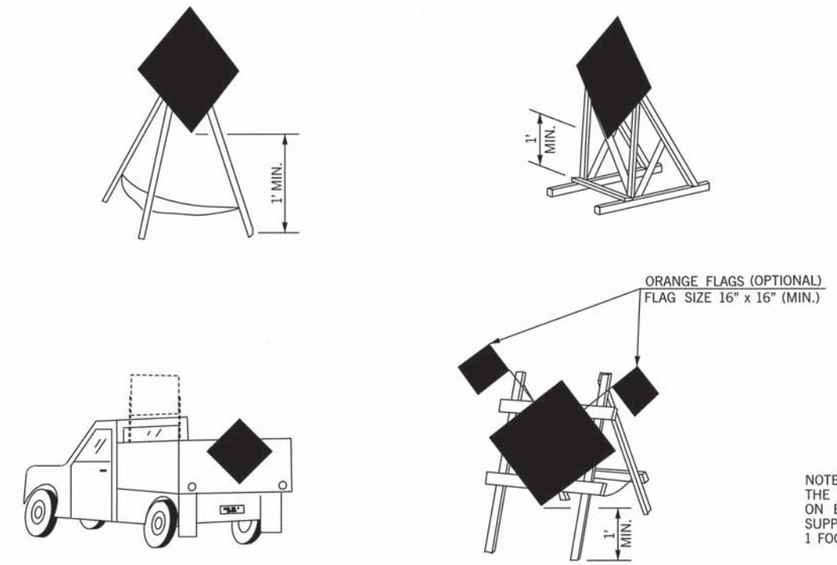

NOTE:
THE BOTTOM OF SIGNS MOUNTED ON BARRICADES OR TEMPORARY SUPPORTS SHALL NOT BE LESS THAN 1 FOOT ABOVE THE TRAVELED WAY.

PORTABLE AND TEMPORARY MOUNTINGS
METHODS OF MOUNTING SIGNS OTHER THAN ON POSTS

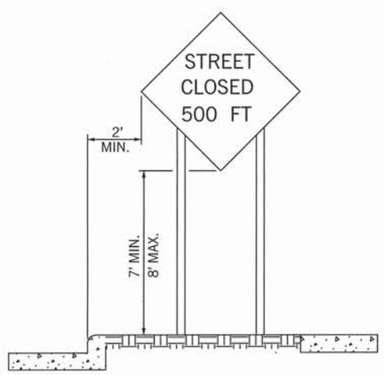

URBAN DISTRICT
(WITH CURB)

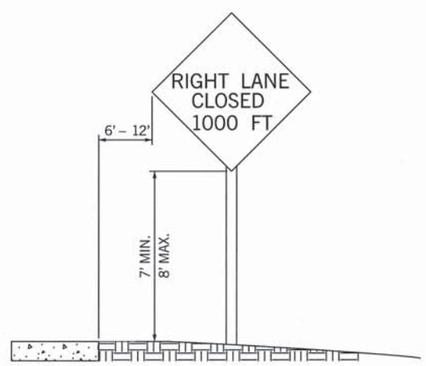

URBAN DISTRICT
(WITHOUT CURB)

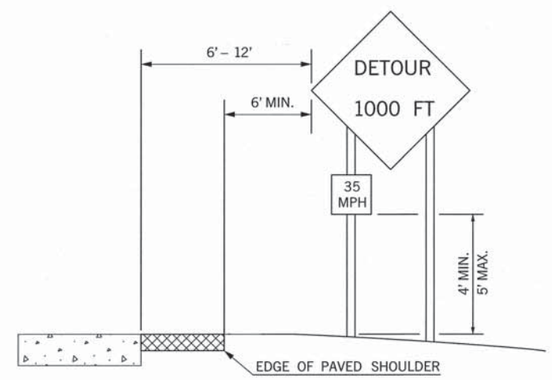

RURAL DISTRICT WITH
ADVISORY SPEED PLATE

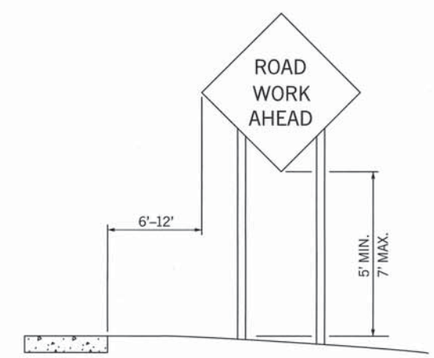

RURAL DISTRICT

HEIGHT AND LATERAL LOCATIONS OF SIGNS – TYPICAL INSTALLATIONS

APPROVED BY
TRAFFIC ENGINEER: DATE: 6/23/10

TRAFFIC STANDARD

TRAFFIC CONTROL STANDARD
TYPICAL SIGN INSTALLATION

2009 SPECIFICATIONS

TCS5–1	00
	T–505

TRFPC36 M:\2009_Standards_TC\t505.dgn 8:24:30 AM 6/23/2010 R:\TRAF_PLOT\leroy.pen R:\TRAF_PLOT\bw.ctb

REVISIONS	
DESCRIPTION	DATE
ADD NOTE TO VERTICAL PANEL	07/19/10
CHANGED TYPE 'C' LIGHT TO OPTIONAL	3/15/2011

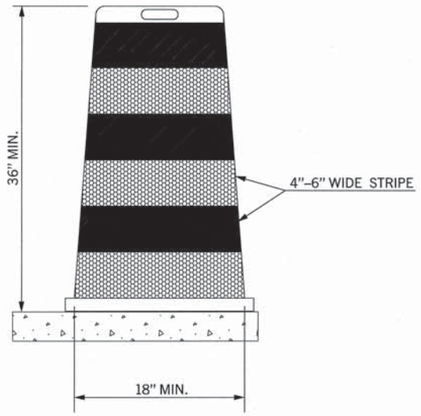

DRUM

NOTES:

METAL DRUMS SHALL NOT BE USED.

EACH DRUM SHALL HAVE A MINIMUM OF TWO (2) FLUORESCENT ORANGE STRIPES ALTERNATING WITH A MINIMUM OF TWO (2) WHITE STRIPES. THESE STRIPES SHALL CONSIST OF RETROREFLECTIVE SHEETING.

BALLAST SHALL NOT BE PLACED ON TOP OF A DRUM.

DRUMS SHALL NOT BE USED TO DELINEATE AN EDGE DROP OFF IF THEY MUST BE PLACED IN THE DROP OFF AREA BELOW THE LEVEL OF THE DRIVING SURFACE.

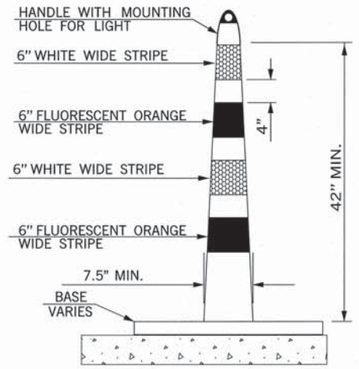

CHANNELIZER CONE

NOTES:

CHANNELIZER CONES USED ON HIGH SPEED ROADWAYS, ON ALL HIGHWAYS DURING NIGHTTIME, OR WHENEVER MORE CONSPICUOUS GUIDANCE IS NEEDED SHALL BE A MINIMUM OF 42 INCHES HIGH.

EACH CHANNELIZERS CONES SHALL HAVE A MINIMUM OF TWO (2) FLUORESCENT ORANGE STRIPES ALTERNATING WITH A MINIMUM OF TWO (2) WHITE STRIPES. THESE STRIPES SHALL CONSIST OF RETROREFLECTIVE SHEETING.

BASE SHALL WEIGH 30 LBS. OR MORE.

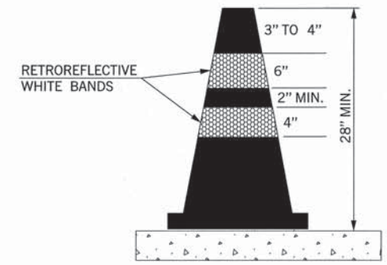

CONE

NOTES:

CONES USED ON HIGH SPEED ROADWAYS, ON ALL HIGHWAYS DURING NIGHTTIME, OR WHENEVER MORE CONSPICUOUS GUIDANCE IS NEEDED SHALL BE A MINIMUM OF 28 INCHES HIGH.

CONES SHALL BE PREDOMINANTLY ORANGE, WITH WHITE RETROREFLECTIVE SHEETING.

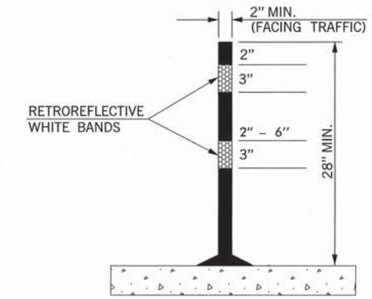

TUBE CHANNELIZER

NOTES:

TUBE CHANNELIZERS USED ON HIGH SPEED ROADWAYS, ON ALL HIGHWAYS DURING NIGHTTIME, OR WHENEVER MORE CONSPICUOUS GUIDANCE IS NEEDED SHALL BE A MINIMUM OF 28 INCHES HIGH.

TUBE CHANNELIZERS SHALL BE PREDOMINANTLY ORANGE, WITH WHITE RETROREFLECTIVE SHEETING.

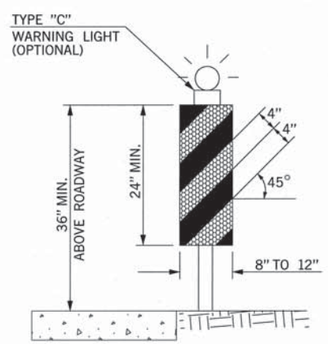

VERTICAL PANEL W/NO DROP OFF

NOTES:

PANEL STRIPE WIDTHS SHALL BE 6 INCHES EXCEPT WHERE PANELS LENGTHS ARE LESS THAN 36 INCHES, THEN 4 INCH WIDE STRIPES MAY BE USED.

MARKINGS FOR VERTICAL PANELS SHALL BE ALTERNATING FLUORESCENT ORANGE AND WHITE RETROEFLECTORIZED STRIPES (SLOPING DOWNWARD AT AN ANGLE OF 45 DEGREES IN THE DIRECTION TRAFFIC IS TO PASS).

SHALL HAVE A MINIMUM OF TWO (2) FULL FLUORESCENT ORANGE STRIPES.

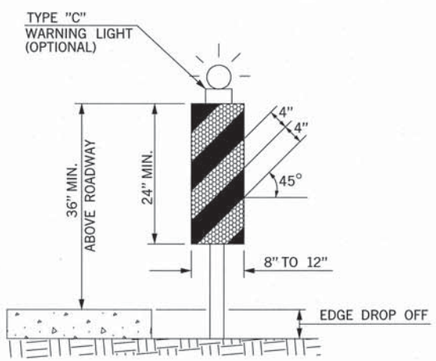

VERTICAL PANEL W/DROP OFF

ON UNDIVIDED HIGHWAYS, VERTICAL PANELS SHALL HAVE A MINIMUM OF 192 SQUARE INCHES OF RETROREFLECTIVE SHEETING ON EACH PANEL (FRONT AND BACK). WHEN USED ON HIGH SPEED ROADWAYS, VERTICAL PANELS SHALL HAVE MINIMUM OF 270 SQUARE INCHES OF RETROREFLECTIVE SHEETING ON EACH PANEL (FRONT AND BACK). THIS SHALL CONSTITUTE ONE (1) COMPLETE VERTICAL PANEL.

ON DIVIDED HIGHWAYS A VERTICAL PANEL MAY HAVE SHEETING ON ONLY ONE SIDE.

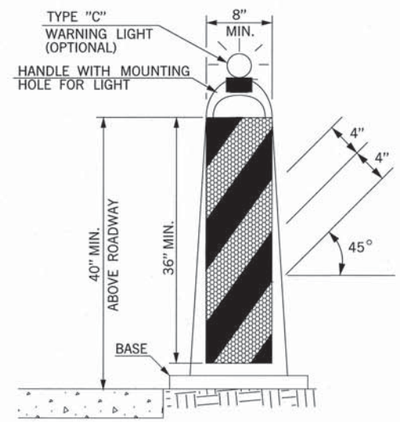

STACKABLE VERTICAL PANEL

NOTES:

(1) VERTICAL PANEL SIGNS SHALL BE MOUNTED BACK TO BACK WHEN USED FOR TWO-WAY TRAFFIC.

(2) BASE SHALL BE NO LARGER THAN 28" LONG BY 20" WIDE, AND 2" THICK.

(3) BASE SHALL WEIGHT 30 LBS. OR MORE.

(4) THESE DEVICES SHALL BE CONSTRUCTED OF A MATERIAL THAT CAN BE STRUCK WITHOUT DAMAGING VEHICLES ON IMPACT.

KEY:

FLUORESCENT ORANGE (REFLECTORIZED)

WHITE (REFLECTORIZED)

BASIS OF PAYMENT		
ITEM NO.	ITEM	UNIT
880(D)	VERTICAL PANEL	SD
880(E)	WARNING LIGHTS	SD
880(F)	DRUMS	SD
880(G)	TUBE CHANNELIZERS	SD
880(H)	CONES	SD
880(G)	CHANNELIZER CONES	SD

APPROVED BY TRAFFIC ENGINEER: DATE: 3/21/11

TRAFFIC STANDARD

TRAFFIC CONTROL STANDARD
CHANNELIZING DEVICES

2009 SPECIFICATIONS

TCS6-1	02
	T-506

$$date$$

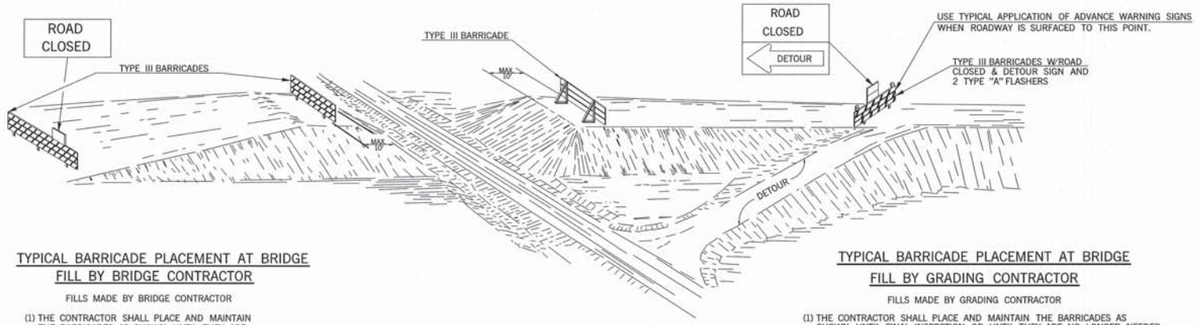

TYPICAL BARRICADE PLACEMENT AT BRIDGE FILL BY BRIDGE CONTRACTOR

FILLS MADE BY BRIDGE CONTRACTOR

(1) THE CONTRACTOR SHALL PLACE AND MAINTAIN THE BARRICADES AS SHOWN UNTIL THEY ARE NO LONGER NEEDED.

(2) THE CONTRACTOR SHALL NOTIFY THE ENGINEER PRIOR TO REMOVAL OF THE BARRICADES.

(3) THE ENGINEER SHALL NOTIFY THE GRADING CONTRACTOR TO FURNISH AND ERECT HIS BARRICADES "IMMEDIATELY" AFTER THE BRIDGE CONTRACTOR REMOVES HIS BARRICADES. THE GRADING CONTRACTOR SHALL MAINTAIN HIS BARRICADES UNTIL FINAL INSPECTION OR UNTIL THEY ARE NO LONGER NEEDED.

(4) BARRICADES AT BRIDGE FILL SHALL BE IN PLACE AND MAINTAINED AT ALL TIMES UNTIL OPENED TO TRAFFIC, HOWEVER, BARRICADES MAY BE REMOVED OR ADJUSTED, AS NEEDED, TO ALLOW ACCESS TO THE WORK AREA.

TYPICAL BARRICADE PLACEMENT AT BRIDGE FILL BY GRADING CONTRACTOR

FILLS MADE BY GRADING CONTRACTOR

(1) THE CONTRACTOR SHALL PLACE AND MAINTAIN THE BARRICADES AS SHOWN UNTIL FINAL INSPECTION OR UNTIL THEY ARE NO LONGER NEEDED.

(2) THE CONTRACTOR SHALL NOTIFY THE ENGINEER PRIOR TO REMOVAL OF THE BARRICADES.

(3) IF THE BRIDGE WORK ORDER IS ISSUED PRIOR TO COMPLETION OF THE GRADING CONTRACT, THE BRIDGE CONTRACTOR SHALL MAKE ARRANGEMENTS WITH THE GRADING CONTRACTOR TO ASSUME RESPONSIBILITY FOR PROTECTION OF THE BRIDGE WORK AREA. THIS WILL INCLUDE FURNISHING, INSTALLING, AND MAINTAINING ALL BARRICADES AND SIGNS NECESSARY TO PROVIDE THAT PROTECTION UNTIL THE BRIDGE IS COMPLETED AND THE FINAL INSPECTION IS COMPLETED.

(4) IF THE BRIDGE WORK ORDER HAS NOT BEEN ISSUED PRIOR TO THE FINAL INSPECTION OF THE GRADING, THEN THE GRADING CONTRACTOR SHALL MAKE ARRANGEMENTS WITH THE OKLAHOMA DEPARTMENT OF TRANSPORTATION FOR STATE FORCES TO SUPPLY, INSTALL AND MAINTAIN ANY NECESSARY TRAFFIC CONTROL DEVICES NEEDED TO PROTECT THE WORK AREA. THESE STATE OWNED DEVICES SHALL REMAIN IN PLACE UNTIL SUCH TIME THAT THE BRIDGE WORK ORDER IS ISSUED. AT THAT TIME THE BRIDGE CONTRACTOR SHALL ASSUME RESPONSIBILITY FOR TRAFFIC CONTROL AND REPLACE THE STATE OWNED DEVICES WITH HIS OWN.

(5) SUFFICENT NUMBER OF TYPE II BARRICADES WITH SIGNS SHALL BE USED TO COMPLETELY CLOSE THE WORK AREA TO THROUGH TRAFFIC.

(6) BARRICADES AT BRIDGE FILL SHALL BE IN PLACE AND MAINTAINED AT ALL TIMES UNTIL OPENED TO TRAFFIC, HOWEVER, BARRICADES MAY BE REMOVED OR ADJUSTED, AS NEEDED, TO ALLOW ACCESS TO THE WORK AREA.

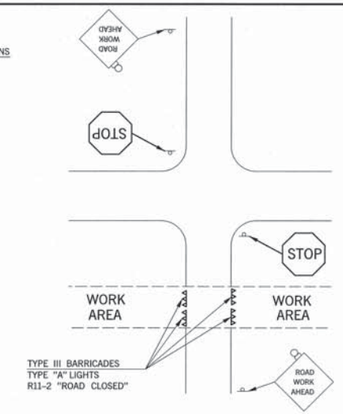

TYPICAL SIGN PLACEMENT FOR INTERSECTING ROADS AND STREETS

NOTES:

(1) SIGNS SHOWN FOR ONE DIRECTION OF TRAVEL ONLY.

(2) FLASHING WARNING LIGHTS SHALL BE USED TO CALL ATTENTION TO THE EARLY WARNING SIGNS.

(3) WARNING LIGHTS SHOULD BE USED TO MARK CHANNELIZING DEVICES AT NIGHT AS NEEDED.

(4) PLACEMENT OF TYPE III BARRICADES SHALL BE APPROVED BY THE ENGINEER.

(5) TYPE II BARRICADES, DRUMS AND/OR VERTICAL PANELS MAY BE SUBSTITUTED FOR TYPE III BARRICADES TO AVOID OBSTRUCTING THE MOTORISTS VIEW.

(6) IF TWO OR MORE DRIVEWAYS ARE IN CLOSE PROXIMITY, THE BARRICADES BETWEEN THE DRIVEWAYS MAY BE OMITTED AT THE DISCRETION OF THE ENGINEER.

(7) THE "ROAD WORK AHEAD" SIGN, WHICH SERVES AS A GENERAL WARNING OF OBSTRUCATIONS OR RESTRICTIONS, SHALL BE LOCATED ON ALL INTERSECTING ROADS AND STREETS.

REVISIONS	
DESCRIPTION	DATE
MODIFIED NOTE	3/15/2011
ADD "NO CELL PHONE" USAGE IN WORK ZONE, DISTANCE SIGN TO WARNING SIGNS	4/2/2013

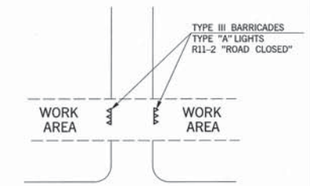

TYPICAL SIGN PLACEMENT FOR PRIVATE DRIVE OR RESIDENCE

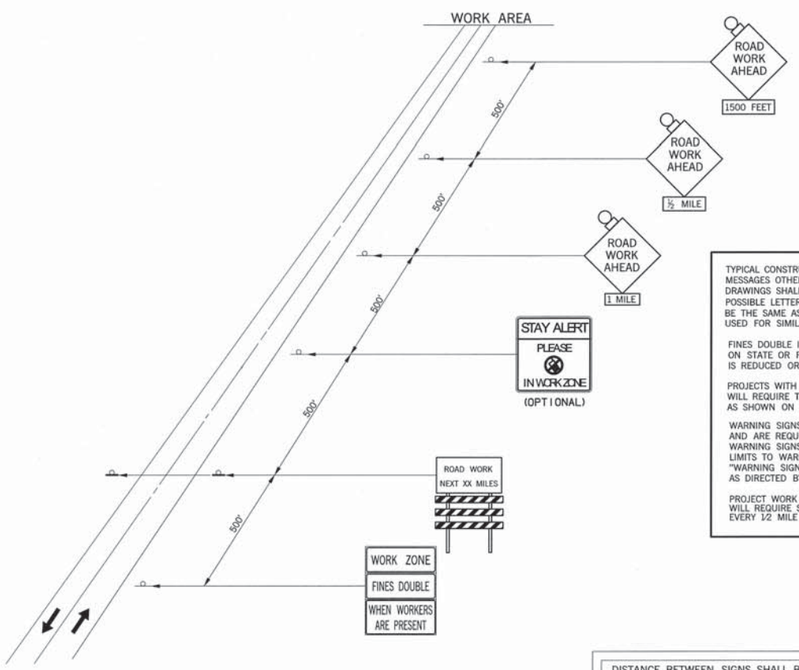

TYPICAL CONSTRUCTION WARNING SIGNS WITH MESSAGES OTHER THAN DETAILED ON STANDARD DRAWINGS SHALL BE CONSTRUCTED USING THE LARGEST POSSIBLE LETTER SIZE. SIGN SIZE AND COLOR SHALL BE THE SAME AS OTHER CONSTRUCTION WARNING SIGNS USED FOR SIMILAR CONDITIONS.

FINES DOUBLE IN WORK ZONE SIGNS ARE TO BE USED ONLY ON STATE OR FEDERAL HIGHWAYS WHERE THE SPEED LIMIT IS REDUCED OR AS DIRECTED BY THE ENGINEER.

PROJECTS WITH WORK LIMITS OF 1.0 MILES OR MORE IN LENGTH WILL REQUIRE THE G20-1A SIGN. THE SIGN SHALL BE MOUNTED AS SHOWN ON TCS4-1-(LATEST REVISION).

WARNING SIGNS SHOWN ARE "ADVANCE" WARNING SIGNS AND ARE REQUIRED ON ALL STATE HIGHWAYS. ADDITIONAL WARNING SIGNS MAY BE REQUIRED WITHIN THE PROJECT LIMITS TO WARN DRIVERS OF SPECIFIC HAZARDS. ADVANCE "WARNING SIGNS" MAY CHANGE AS CONDITIONS CHANGE OR AS DIRECTED BY THE ENGINEER.

PROJECT WORK OF 1.0 MILE OR MORE IN LENGTH WILL REQUIRE SIGNS CS-14 AND R2-1 TO BE PLACED EVERY 1/2 MILE THROUGH WORK ZONE.

TYPICAL APPLICATION ADVANCE WARNING SIGNS ON 2-LANE HIGHWAY

DISTANCE BETWEEN SIGNS SHALL BE A (MIN.)			
ROAD TYPE	A (FT)	B (FT)	C (FT)
URBAN (LOW SPEED)	100	100	100
URBAN (HIGH SPEED)	350	350	350
RURAL	500	500	500
EXPRESSWAY /FREEWAY	1,000	1,500	2,640

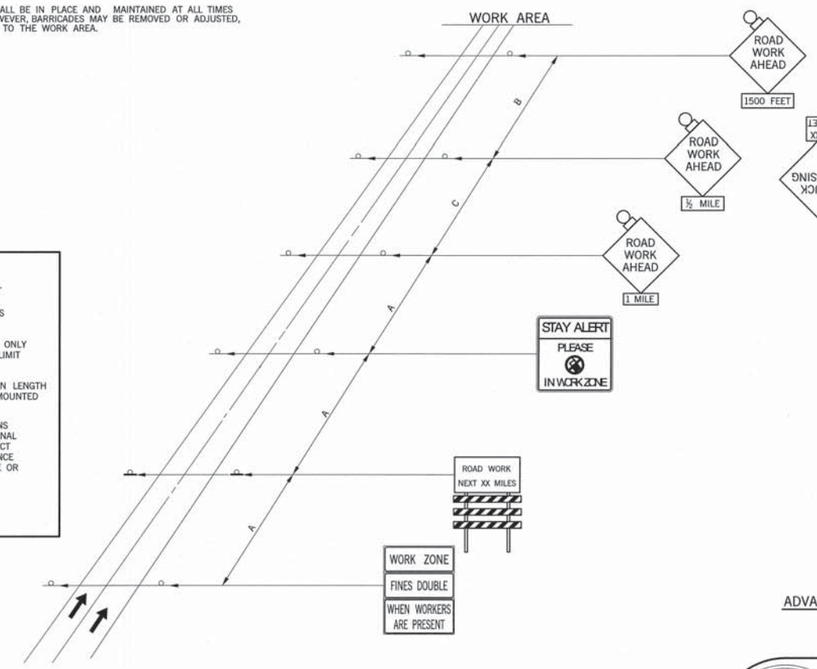

TYPICAL APPLICATION ADVANCE WARNING SIGNS ON A DIVIDED HIGHWAY

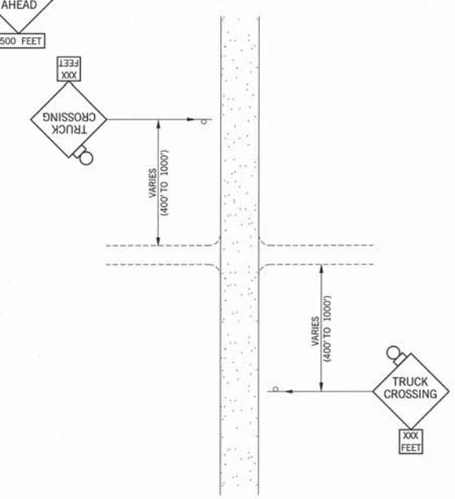

TYPICAL APPLICATION ADVANCE SIGNING WHERE TRUCKS ARE CROSSING

APPROVED BY TRAFFIC ENGINEER: DATE: 4/8/2013

TRAFFIC STANDARD

TRAFFIC CONTROL STANDARD PLACEMENT OF ADVANCE WARNING SIGNS

2009 SPECIFICATIONS

TCS7-1	02
	T-507

$$date$$

DESCRIPTION	REVISIONS	DATE
CHANGED SIGN DESIGNATION		3/15/2011

ROAD CLOSED

R11-2 48 x 30 10.00 SF

COLOR:
LEGEND AND BORDER:
BLACK (NON-REFLECTORIZED)
BACKGROUND:
WHITE (REFLECTORIZED)

LANE CLOSED

R11-2(LANE) 48 x 30 10.00 SF

COLOR:
LEGEND AND BORDER:
BLACK (NON-REFLECTORIZED)
BACKGROUND:
WHITE (REFLECTORIZED)

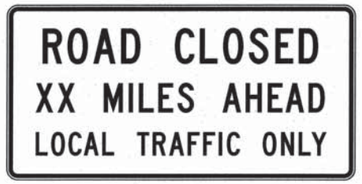

ROAD CLOSED XX MILES AHEAD

R11-3a 60 x 30 12.50 SF

COLOR:
LEGEND AND BORDER:
BLACK (NON-REFLECTORIZED)
BACKGROUND:
WHITE (REFLECTORIZED)

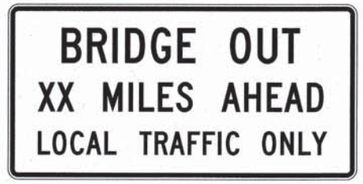

BRIDGE OUT XX MILES AHEAD

R11-3b 60 x 30 12.50 SF

COLOR:
LEGEND AND BORDER:
BLACK (NON-REFLECTORIZED)
BACKGROUND:
WHITE (REFLECTORIZED)

ROAD CLOSED TO THRU TRAFFIC

R11-4 60 x 30 12.50 SF

COLOR:
LEGEND AND BORDER:
BLACK (NON-REFLECTORIZED)
BACKGROUND:
WHITE (REFLECTORIZED)

DETOUR SIGN

M4-8 24 x 12 2.00 SF
M4-8E 30 x 15 3.13 SF

COLOR:
LEGEND AND BORDER:
BLACK (NON-REFLECTORIZED)
BACKGROUND:
FLUORESCENT ORANGE
(REFLECTORIZED)

DETOUR SIGN

M4-9(R) 30 x 24 5.00 SF
M4-9(R)E 48 x 36 12.00 SF
M4-9(R)F 60 x 48 20.00 SF

COLOR:
LEGEND AND BORDER:
BLACK (NON-REFLECTORIZED)
BACKGROUND:
FLUORESCENT ORANGE
(REFLECTORIZED)

DETOUR SIGN

M4-9(L) 30 x 24 5.00 SF
M4-9(L)E 48 x 36 12.00 SF
M4-9(L)F 60 x 48 20.00 SF

COLOR:
LEGEND AND BORDER:
BLACK (NON-REFLECTORIZED)
BACKGROUND:
FLUORESCENT ORANGE
(REFLECTORIZED)

DETOUR SIGN

M4-9(V) 30 x 24 5.00 SF
M4-9(V)E 48 x 36 12.00 SF
M4-9(V)F 60 x 48 20.00 SF

COLOR:
LEGEND AND BORDER:
BLACK (NON-REFLECTORIZED)
BACKGROUND:
FLUORESCENT ORANGE
(REFLECTORIZED)

DETOUR SIGN

M4-10(R) 48 x 18 6.00 SF

COLOR:
LEGEND AND BORDER:
BLACK (NON-REFLECTORIZED)
BACKGROUND:
FLUORESCENT ORANGE
(REFLECTORIZED)

DETOUR SIGN

M4-10(L) 48 x 18 6.00 SF

COLOR:
LEGEND AND BORDER:
BLACK (NON-REFLECTORIZED)
BACKGROUND:
FLUORESCENT ORANGE
(REFLECTORIZED)

ROAD WORK NEXT XX MILES SIGN

G20-1A 36 x 18 4.50 SF

COLOR:
LEGEND AND BORDER:
BLACK (NON-REFLECTORIZED)
BACKGROUND:
FLUORESCENT ORANGE
(REFLECTORIZED)

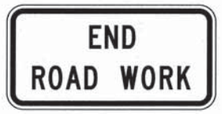

END ROAD WORK SIGN

G20-2A 36 x 18 4.50 SF

COLOR:
LEGEND AND BORDER:
BLACK (NON-REFLECTORIZED)
BACKGROUND:
FLUORESCENT ORANGE
(REFLECTORIZED)

PILOT CAR FOLLOW ME SIGN

G20-4 36 x 18 4.50 SF

COLOR:
LEGEND AND BORDER:
BLACK (NON-REFLECTORIZED)
BACKGROUND:
FLUORESCENT ORANGE
(REFLECTORIZED)

NOTES:
WORD SIGNS MAY BE USED IF SYMBOL SIGNS ARE NOT AVAILABLE EITHER IN "STANDARD HIGHWAY SIGNS MANUAL" OR IN THE "MANUAL ON UNIFORM TRAFFIC CONTROL DEVICES" (MUTCD) (CURRENT EDITION).

ALL DIAMOND SHAPE CONSTRUCTION WARNING SIGNS SHALL BE 48 INCHES X 48 INCHES UNLESS OTHERWISE NOTED IN THE PLANS.

BASIS OF PAYMENT

ITEM NO.	ITEM	UNIT
880(B)	CONSTRUCTION SIGNS	SD

APPROVED BY TRAFFIC ENGINEER: DATE: 3/21/11

TRAFFIC STANDARD

TRAFFIC CONTROL STANARD
CONSTRUCTION SIGNS

2009 SPECIFICATIONS

TCS9-1 | 01

T-509

$$date$$

TURN LEFT

W1-1(L) 48 x 48 16.00 SF

COLOR:
SYMBOL AND BORDER:
BLACK (NON-REFLECTORIZED)
BACKGROUND:
FLUORESCENT ORANGE
(REFLECTORIZED)

TURN RIGHT

W1-1(R) 48 x 48 16.00 SF

COLOR:
SYMBOL AND BORDER:
BLACK (NON-REFLECTORIZED)
BACKGROUND:
FLUORESCENT ORANGE
(REFLECTORIZED)

CURVE LEFT

W1-2(L) 48 x 48 16.00 SF

COLOR:
SYMBOL AND BORDER:
BLACK (NON-REFLECTORIZED)
BACKGROUND:
FLUORESCENT ORANGE
(REFLECTORIZED)

CURVE RIGHT

W1-2(R) 48 x 48 16.00 SF

COLOR:
SYMBOL AND BORDER:
BLACK (NON-REFLECTORIZED)
BACKGROUND:
FLUORESCENT ORANGE
(REFLECTORIZED)

LEFT REVERSE TURN

W1-3(L) 48 x 48 16.00 SF

COLOR:
SYMBOL AND BORDER:
BLACK (NON-REFLECTORIZED)
BACKGROUND:
FLUORESCENT ORANGE
(REFLECTORIZED)

RIGHT REVERSE TURN

W1-3(R) 48 x 48 16.00 SF

COLOR:
SYMBOL AND BORDER:
BLACK (NON-REFLECTORIZED)
BACKGROUND:
FLUORESCENT ORANGE
(REFLECTORIZED)

LEFT REVERSE CURVE

W1-4(L) 48 x 48 16.00 SF

COLOR:
SYMBOL AND BORDER:
BLACK (NON-REFLECTORIZED)
BACKGROUND:
FLUORESCENT ORANGE
(REFLECTORIZED)

RIGHT REVERSE CURVE

W1-4(R) 48 x 48 16.00 SF

COLOR:
SYMBOL AND BORDER:
BLACK (NON-REFLECTORIZED)
BACKGROUND:
FLUORESCENT ORANGE
(REFLECTORIZED)

LEFT REVERSE CURVE

W1-4B(L) 48 x 48 16.00 SF

COLOR:
SYMBOL AND BORDER:
BLACK (NON-REFLECTORIZED)
BACKGROUND:
FLUORESCENT ORANGE
(REFLECTORIZED)

RIGHT REVERSE CURVE

W1-4B(R) 48 x 48 16.00 SF

COLOR:
SYMBOL AND BORDER:
BLACK (NON-REFLECTORIZED)
BACKGROUND:
FLUORESCENT ORANGE
(REFLECTORIZED)

DESCRIPTION	REVISIONS	DATE

NOTES:
WORD SIGNS MAY BE USED IF SYMBOL SIGNS ARE NOT AVAILABLE EITHER IN "STANDARD HIGHWAY SIGNS MANUAL" OR IN THE "MANUAL ON UNIFORM TRAFFIC CONTROL DEVICES" (MUTCD) (CURRENT EDITION).

ALL DIAMOND SHAPE CONSTRUCTION WARNING SIGNS SHALLBE 48 INCHES X 48 INCHES UNLESS OTHERWISE NOTED IN THE PLANS.

* SUPPLEMENTAL SIGNS SHALL ONLY BE USED IN CONJUCTION WITH DIAMOND SHAPE CONSTRUCTION WARNING SIGNS . THE SIZE OF SUPPLEMENTAL SIGNS SHALL BE APPROPRIATE FOR USE WITH A 48 INCH x 48 INCH WARNING SIGN UNLESS OTHERWISE NOTED IN THE PLANS.

LEFT REVERSE CURVE

W1-4C(L) 48 x 48 16.00 SF

COLOR:
SYMBOL AND BORDER:
BLACK (NON-REFLECTORIZED)
BACKGROUND:
FLUORESCENT ORANGE
(REFLECTORIZED)

RIGHT REVERSE CURVE

W1-4C(R) 48 x 48 16.00 SF

COLOR:
SYMBOL AND BORDER:
BLACK (NON-REFLECTORIZED)
BACKGROUND:
FLUORESCENT ORANGE
(REFLECTORIZED)

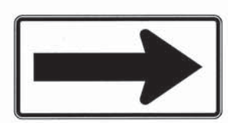

ARROW

W1-6 48 x 24 8.00 SF
W1-6E 60 x 30 12.50 SF

COLOR:
SYMBOL AND BORDER:
BLACK (NON-REFLECTORIZED)
BACKGROUND:
FLUORESCENT ORANGE
(REFLECTORIZED)

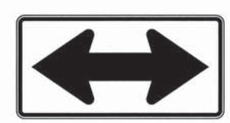

DOUBLE ARROW

W1-7 48 x 24 8.00 SF
W1-7E 60 x 30 12.50 SF

COLOR:
SYMBOL AND BORDER:
BLACK (NON-REFLECTORIZED)
BACKGROUND:
FLUORESCENT ORANGE
(REFLECTORIZED)

BASIS OF PAYMENT

ITEM NO.	ITEM	UNIT
880(B)	CONSTRUCTION SIGNS	SD

APPROVED BY TRAFFIC ENGINEER: DATE: 6/23/10

TRAFFIC STANDARD

TRAFFIC CONTROL STANDARD
CONSTRUCTION SIGNS

2009 SPECIFICATIONS

TCS10-1 | 00

T-510

TRFPC36 M:\2009_Standards_TC\1510.dgn 8:27:40 AM 6/23/2010 R:\TRAF_PLOT\leroy.pen R:\TRAF_PLOT\bw.ctb

DESCRIPTION	REVISIONS	DATE

ROAD WORK SIGN

W20-1 48 x 48 16.00 SF
COLOR:
LEGEND AND BORDER:
BLACK (NON-REFLECTORIZED)
BACKGROUND:
FLUORESCENT ORANGE (REFLECTORIZED)

DETOUR SIGN

W20-2 48 x 48 16.00 SF
COLOR:
LEGEND AND BORDER:
BLACK (NON-REFLECTORIZED)
BACKGROUND:
FLUORESCENT ORANGE (REFLECTORIZED)

ROAD CLOSED SIGN

W20-3 48 x 48 16.00 SF
COLOR:
LEGEND AND BORDER:
BLACK (NON-REFLECTORIZED)
BACKGROUND:
FLUORESCENT ORANGE (REFLECTORIZED)

STREET CLOSED SIGN

W20-3A 48 x 48 16.00 SF
COLOR:
LEGEND AND BORDER:
BLACK (NON-REFLECTORIZED)
BACKGROUND:
FLUORESCENT ORANGE (REFLECTORIZED)

ONE LANE ROAD SIGN

W20-4 48 x 48 16.00 SF
COLOR:
LEGEND AND BORDER:
BLACK (NON-REFLECTORIZED)
BACKGROUND:
FLUORESCENT ORANGE (REFLECTORIZED)

LEFT LANE CLOSED SIGN

W20-5(L) 48 x 48 16.00 SF
COLOR:
LEGEND AND BORDER:
BLACK (NON-REFLECTORIZED)
BACKGROUND:
FLUORESCENT ORANGE (REFLECTORIZED)

RIGHT LANE CLOSED SIGN

W20-5(R) 48 x 48 16.00 SF
COLOR:
LEGEND AND BORDER:
BLACK (NON-REFLECTORIZED)
BACKGROUND:
FLUORESCENT ORANGE (REFLECTORIZED)

FLAGGER SIGN

W20-7 48 x 48 16.00 SF
COLOR:
LEGEND AND BORDER:
BLACK (NON-REFLECTORIZED)
BACKGROUND:
FLUORESCENT ORANGE (REFLECTORIZED)

FLAGGER SIGN

W20-7a 48 x 48 16.00 SF
COLOR:
LEGEND AND BORDER:
BLACK (NON-REFLECTORIZED)
BACKGROUND:
FLUORESCENT ORANGE (REFLECTORIZED)

WORKERS SIGN

W21-1 48 x 48 16.00 SF
COLOR:
LEGEND AND BORDER:
BLACK (NON-REFLECTORIZED)
BACKGROUND:
FLUORESCENT ORANGE (REFLECTORIZED)

FRESH OIL SIGN

W21-2 48 x 48 16.00 SF
COLOR:
LEGEND AND BORDER:
BLACK (NON-REFLECTORIZED)
BACKGROUND:
FLUORESCENT ORANGE (REFLECTORIZED)

ROAD MACHINERY AHEAD SIGN

W21-3 48 x 48 16.00 SF
COLOR:
LEGEND AND BORDER:
BLACK (NON-REFLECTORIZED)
BACKGROUND:
FLUORESCENT ORANGE (REFLECTORIZED)

NOTES:
WORD SIGNS MAY BE USED IF SYMBOL SIGNS ARE NOT AVAILABLE EITHER IN "STANDARD HIGHWAY SIGNS MANUAL" OR IN THE "MANUAL ON UNIFORM TRAFFIC CONTROL DEVICES" (MUTCD) (CURRENT EDITION).

ALL DIAMOND SHAPE CONSTRUCTION WARNING SIGNS SHALL BE 48 INCHES X 48 INCHES UNLESS OTHERWISE NOTED IN THE PLANS.

* SUPPLEMENTAL SIGNS SHALL ONLY BE USED IN CONJUCTION WITH DIAMOND SHAPE CONSTRUCTION WARNING SIGNS. THE SIZE OF SUPPLEMENTAL SIGNS SHALL BE APPROPRIATE FOR USE WITH A 48 INCH x 48 INCH WARNING SIGN UNLESS OTHERWISE NOTED IN THE PLANS.

BASIS OF PAYMENT

ITEM NO.	ITEM	UNIT
880(B)	CONSTRUCTION SIGNS	SD

APPROVED BY TRAFFIC ENGINEER: DATE: 6/23/10

TRAFFIC STANDARD

TRAFFIC CONTROL STANDARD
CONSTRUCTION SIGNS

2009 SPECIFICATIONS

TCS14-1 | 00

T-514

DOUBLE REVERSE CURVE (1 LANE)

W24-1(L) 48 X 48 16.00 SF

COLOR:
LEGEND AND BORDER:
BLACK (NON-REFLECTORIZED)
BACKGROUND:
FLUORESCENT ORANGE (REFLECTORIZED)

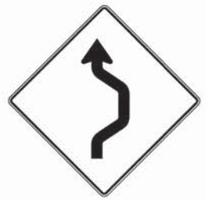

DOUBLE REVERSE CURVE (1 LANE)

W24-1(R) 48 X 48 16.00 SF

COLOR:
LEGEND AND BORDER:
BLACK (NON-REFLECTORIZED)
BACKGROUND:
FLUORESCENT ORANGE (REFLECTORIZED)

DOUBLE REVERSE CURVE (2 LANE)

W24-1a(L) 48 X 48 16.00 SF

COLOR:
LEGEND AND BORDER:
BLACK (NON-REFLECTORIZED)
BACKGROUND:
FLUORESCENT ORANGE (REFLECTORIZED)

DOUBLE REVERSE CURVE (2 LANE)

W24-1a(R) 48 X 48 16.00 SF

COLOR:
LEGEND AND BORDER:
BLACK (NON-REFLECTORIZED)
BACKGROUND:
FLUORESCENT ORANGE (REFLECTORIZED)

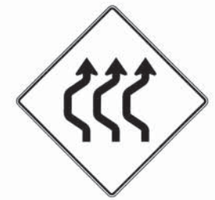

DOUBLE REVERSE CURVE (3 LANE)

W24-1b(L) 48 X 48 16.00 SF

COLOR:
LEGEND AND BORDER:
BLACK (NON-REFLECTORIZED)
BACKGROUND:
FLUORESCENT ORANGE (REFLECTORIZED)

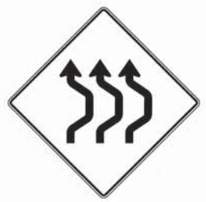

DOUBLE REVERSE CURVE (3 LANE)

W24-1b(R) 48 X 48 16.00 SF

COLOR:
LEGEND AND BORDER:
BLACK (NON-REFLECTORIZED)
BACKGROUND:
FLUORESCENT ORANGE (REFLECTORIZED)

ALL LANES*

W24-1cP 24 X 24 4.00 SF
W24-1cEP 30 X 30 6.25 SF

COLOR:
LEGEND AND BORDER:
BLACK (NON-REFLECTORIZED)
BACKGROUND:
FLUORESCENT ORANGE (REFLECTORIZED)

DESCRIPTION	REVISIONS	DATE

NOTES:
WORD SIGNS MAY BE USED IF SYMBOL SIGNS ARE NOT AVAILABLE EITHER IN "STANDARD HIGHWAY SIGNS MANUAL" OR IN THE "MANUAL ON UNIFORM TRAFFIC CONTROL DEVICES" (MUTCD) (CURRENT EDITION).

ALL DIAMOND SHAPE CONSTRUCTION WARNING SIGNS SHALLBE 48 INCHES X 48 INCHES UNLESS OTHERWISE NOTED IN THE PLANS.

* SUPPLEMENTAL SIGNS SHALL ONLY BE USED IN CONJUCTION WITH DIAMOND SHAPE CONSTRUCTION WARNING SIGNS . THE SIZE OF SUPPLEMENTAL SIGNS SHALL BE APPROPRIATE FOR USE WITH A 48 INCH x 48 INCH WARNING SIGN UNLESS OTHERWISE NOTED IN THE PLANS.

BASIS OF PAYMENT

ITEM NO.	ITEM	UNIT
880(B)	CONSTRUCTION SIGNS	SD

APPROVED BY TRAFFIC ENGINEER: DATE: 6/23/10

TRAFFIC STANDARD

TRAFFIC CONTROL STANDARD
CONSTRUCTION SIGNS

2009 SPECIFICATIONS

TCS16-1 | 00
T-516

TRFPC36 M:\2009_Standards_TC\t516.dgn 8:39:54 AM 6/23/2010 R:\TRAF_PLOT\leroy.pen R:\TRAF_PLOT\bw.ctb

DESCRIPTION	REVISIONS	DATE
CHANGED DECRIPTIONS		3/15/2011

Dimensions are in inches.tenths

SIGN NUMBER	CS-13
WIDTH x HGHT.	2'-0" x 1'-0"
BORDER WIDTH	0.63"
CORNER RADIUS	1.5"
MOUNTING	Ground
SIGN AREA	2.0 Sq.Ft.
BACKGROUND	TYPE: Reflective
	COLOR: FLO*
LEGEND/BORDER	TYPE: Non-Reflective
	COLOR: Black

LETTER POSITIONS (X)									LENGTH	SERIES/SIZE
B	E	G	I	N						D 2000
4.8	8.2	11.3	14.9	16.5				14.4		

Dimensions are in inches.tenths

SIGN NUMBER	CS-13E
WIDTH x HGHT.	3'-0" x 1'-0"
BORDER WIDTH	0.63"
CORNER RADIUS	1.5"
MOUNTING	Ground
SIGN AREA	3.0 Sq.Ft.
BACKGROUND	TYPE: Reflective
	COLOR: FLO*
LEGEND/BORDER	TYPE: Non-Reflective
	COLOR: Black

LETTER POSITIONS (X)										LENGTH	SERIES/SIZE
B	E	G	I	N							D 2000
7.2	12.3	16.9	22.3	24.7					21.6		

Dimensions are in inches.tenths

SIGN NUMBER	CS-13F
WIDTH x HGHT.	4'-0" x 1'-6"
BORDER WIDTH	0.63"
CORNER RADIUS	1.5"
MOUNTING	Ground
SIGN AREA	6.0 Sq.Ft.
BACKGROUND	TYPE: Reflective
	COLOR: FLO*
LEGEND/BORDER	TYPE: Non-Reflective
	COLOR: Black

LETTER POSITIONS (X)										LENGTH	SERIES/SIZE
B	E	G	I	N							E 2000
7.1	15.2	22.6	30.9	34.4					33.8		

FLO* = FLUORESCENT ORANGE

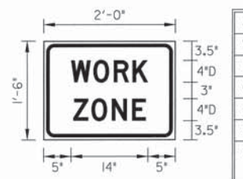

Dimensions are in inches.tenths

SIGN NUMBER	CS-14
WIDTH x HGHT.	2'-0" x 1'-6"
BORDER WIDTH	0.63"
CORNER RADIUS	1.5"
MOUNTING	Ground
SIGN AREA	3.0 Sq.Ft.
BACKGROUND	TYPE: Reflective
	COLOR: FLO*
LEGEND/BORDER	TYPE: Non-Reflective
	COLOR: Black

LETTER POSITIONS (X)										LENGTH	SERIES/SIZE
W	O	R	K								D 2000
5	9.1	12.8	16.2					14			
Z	O	N	E								D 2000
5.4	8.7	12.5	16.1					13.2			

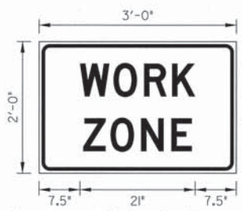

Dimensions are in inches.tenths

SIGN NUMBER	CS-14E
WIDTH x HGHT.	3'-0" x 2'-0"
BORDER WIDTH	0.63"
CORNER RADIUS	1.5"
MOUNTING	Ground
SIGN AREA	6.0 Sq.Ft.
BACKGROUND	TYPE: Reflective
	COLOR: FLO*
LEGEND/BORDER	TYPE: Non-Reflective
	COLOR: Black

LETTER POSITIONS (X)										LENGTH	SERIES/SIZE
W	O	R	K								D 2000
7.5	13.6	19.2	24.3						21		
Z	O	N	E								D 2000
8.1	13.1	18.7	24.2						19.8		

Dimensions are in inches.tenths

SIGN NUMBER	CS-14F
WIDTH x HGHT.	4'-0" x 3'-0"
BORDER WIDTH	0.63"
CORNER RADIUS	1.5"
MOUNTING	Ground
SIGN AREA	12.0 Sq.Ft.
BACKGROUND	TYPE: Reflective
	COLOR: FLO*
LEGEND/BORDER	TYPE: Non-Reflective
	COLOR: Black

LETTER POSITIONS (X)										LENGTH	SERIES/SIZE
W	O	R	K								E 2000
7.6	17.2	25.7	33.8						32.9		
Z	O	N	E								E 2000
8.5	16.4	24.9	33.5						31		

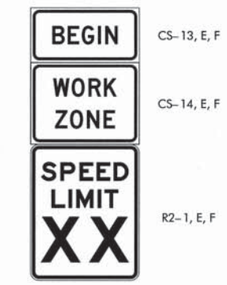

CS-13, E, F

CS-14, E, F

R2-1, E, F

CONSTRUCTION
BEGIN WORK ZONE
SPEED LIMIT
ASSEMBLY

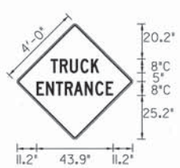

Dimensions are in inches.tenths

SIGN NUMBER	CS-15
WIDTH x HGHT	4'-0" x 4'-0"
BORDER WIDTH	0.75"
CORNER RADIUS	1.38"
MOUNTING	Ground
SIGN AREA	16.0 Sq.Ft.
BACKGROUND	TYPE: Reflective
	COLOR: Yellow
LEGEND/BORDER	TYPE: Reflective
	COLOR: Black

LETTER POSITIONS (X)										LENGTH	SERIES/SIZE
T	R	U	C	K							C 2000
19.3	24.5	30.4	36.5	42.5					27.7		
E	N	T	R	A	N	C	E				C 2000
11.2	16.7	22.3	27.5	32.7	38.9	45	51.1		43.9		

BASIS OF PAYMENT

ITEM NO.	ITEM	UNIT
880(B)	CONSTRUCTION SIGNS	SD

APPROVED BY TRAFFIC ENGINEER: DATE: 3/21/11

TRAFFIC STANDARD

TRAFFIC CONTROL STANDARD
CONSTRUCTION SIGNS

2009 SPECIFICATIONS

TCS19-1	01
	T-519

$$date$$

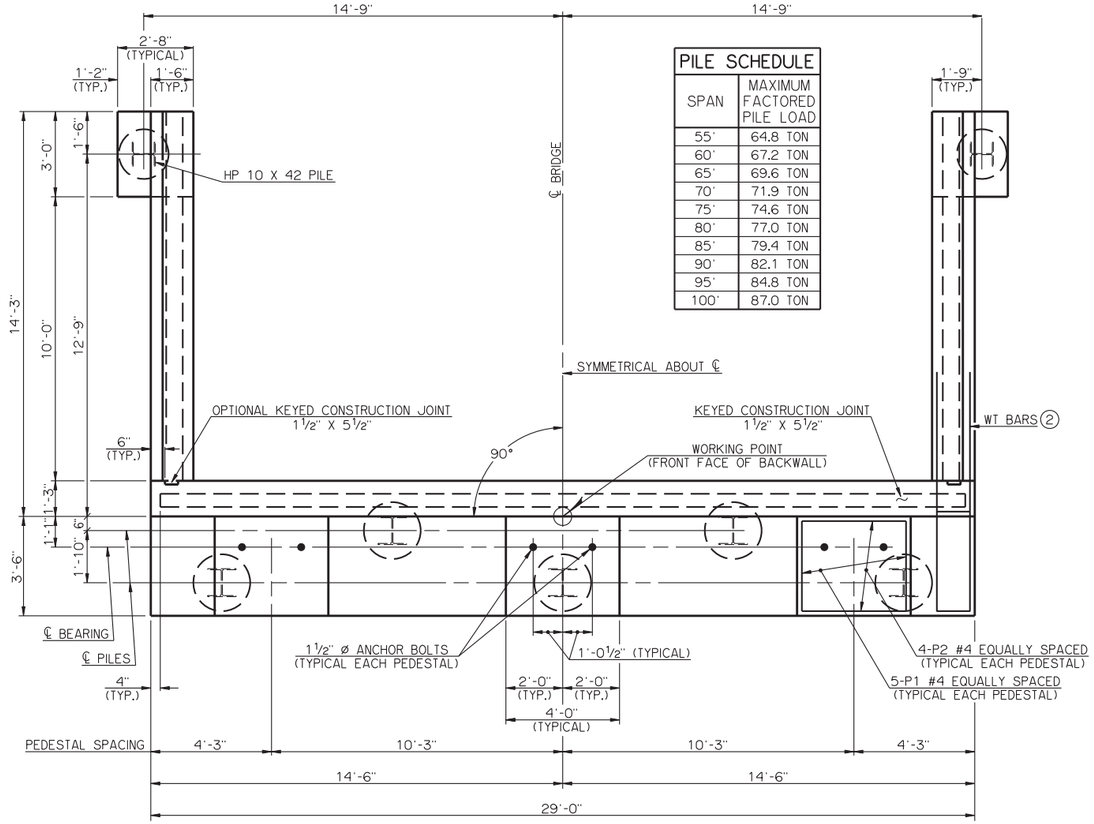

PLAN

PILE SCHEDULE	
SPAN	MAXIMUM FACTORED PILE LOAD
55'	64.8 TON
60'	67.2 TON
65'	69.6 TON
70'	71.9 TON
75'	74.6 TON
80'	77.0 TON
85'	79.4 TON
90'	82.1 TON
95'	84.8 TON
100'	87.0 TON

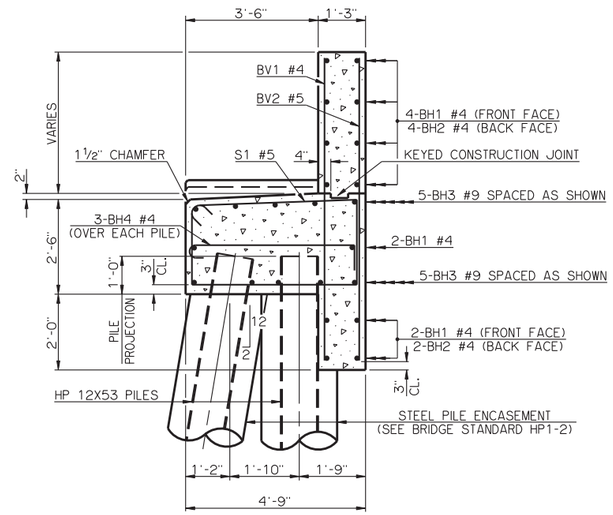

TYPICAL SECTION THRU ABUTMENT

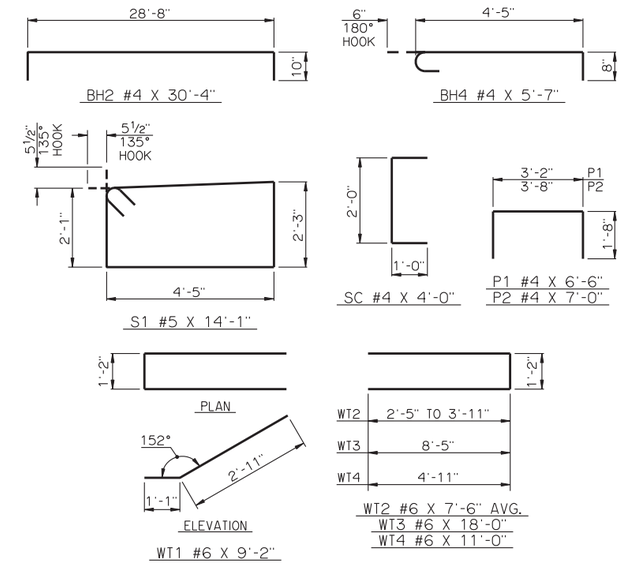

DETAILS OF BENT REINFORCING STEEL

BAR LIST - ONE ABUTMENT					
MARK	NO.	SIZE	FORM	LENGTH	LENGTH VARIATION
BH1	8	#4	STR.	28'-8"	-
BH2	6	#4	BNT.	30'-4"	-
BH3	10	#9	STR.	28'-8"	-
BH4	15	#4	BNT.	5'-7"	-
③ BV1	30	#4	STR.	7'-10" AVG.	7'-8" TO 8'-0"
③ BV2	30	#5	STR.	7'-10" AVG.	7'-8" TO 8'-0"
P1	15	#4	BNT.	6'-6"	-
P2	12	#4	BNT.	7'-0"	-
S1	30	#5	BNT.	14'-1"	-
SC	6	#4	BNT.	4'-0"	-
WT1	2	#6	BNT.	9'-2"	-
④ WT2	4	#6	BNT.	7'-6" AVG.	6'-0" TO 9'-0"
WT3	8	#6	BNT.	18'-0"	-
WT4	10	#6	BNT.	11'-0"	-

③ NO. INCLUDES TWO SETS OF 15 BARS
④ NO. INCLUDES TWO SETS OF 2 BARS

PEDESTAL DIMENSIONS		
SPAN	P1	P2
55'	8 5/16"	10 13/16"
60'	5 5/8"	8 1/8"
65'	5 5/16"	7 13/16"
70'	5 3/16"	7 5/8"
75'	2 3/16"	4 11/16"
80'	3"	5 1/2"
85'	2 11/16"	5 3/16"
90'	2 5/16"	4 3/4"
95'	2"	4 7/16"
100'	2"	4 7/16"

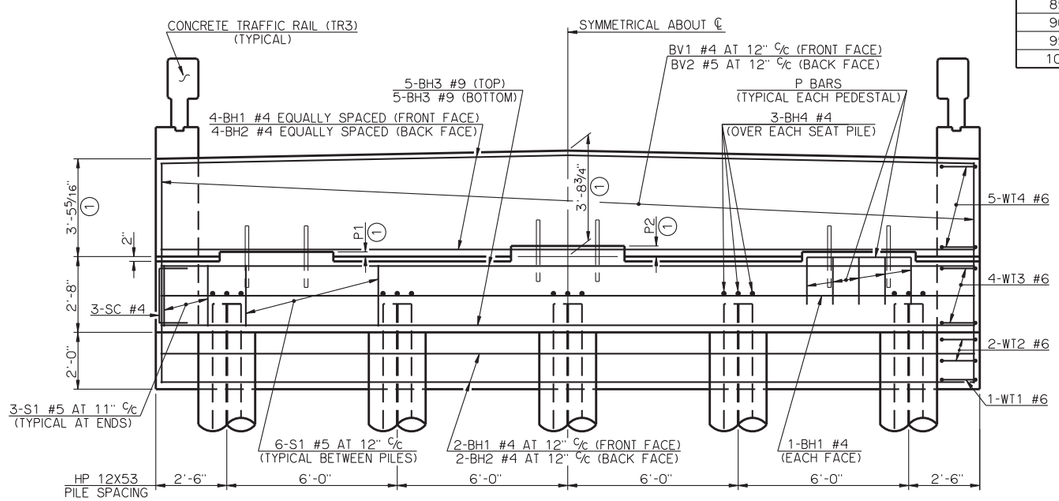

ELEVATION

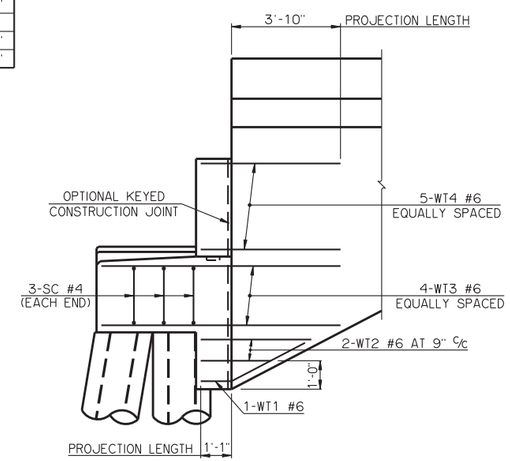

SIDE VIEW

SUMMARY OF QUANTITIES - ONE ABUTMENT ⑤		
ITEM	UNIT	TOTAL
SUBSTRUCTURE EXCAVATION, COMMON	CY	60.00
GRANULAR BACKFILL	CY	32.00
CLASS A CONCRETE	CY	22.20
REINFORCING STEEL	LB	2,740.00
PILES, FURNISHED (HP 12X53)	LF	-
PILES, DRIVEN (HP 12X53)	LF	-
6" PERFORATED PIPE UNDERDRAIN	LF	26.00
6" NON-PERFORATED PIPE UNDERDRAIN	LF	-

⑤ EXCLUDES WINGS

① DIMENSIONS ARE FROM TOP OF BRIDGE SEAT AT FRONT FACE OF BACKWALL.

② ALL WT WING REINFORCING STEEL TIED TO THE ABUTMENT BRIDGE SEAT, BACKWALL AND CURTAIN WALL REINFORCING STEEL MUST BE IN PLACE PRIOR TO POURING ABUTMENT CONCRETE. FOR ADDITIONAL INFORMATION SEE WING DETAILS.

APPROVED BY BRIDGE ENGINEER Robert J Lusch DATE 10-31-2011

OKLAHOMA DEPARTMENT OF TRANSPORTATION
COUNTY BRIDGE STANDARD (ENGLISH)

ABUTMENT DETAILS
55' THRU 100' ROLLED BEAMS

26' CLEAR ROADWAY - CONVENTIONAL - SKEWED 0°

2009 SPECIFICATIONS | CB26-C-SKO-ABUT-RB-55100 | 02E

CB-155E

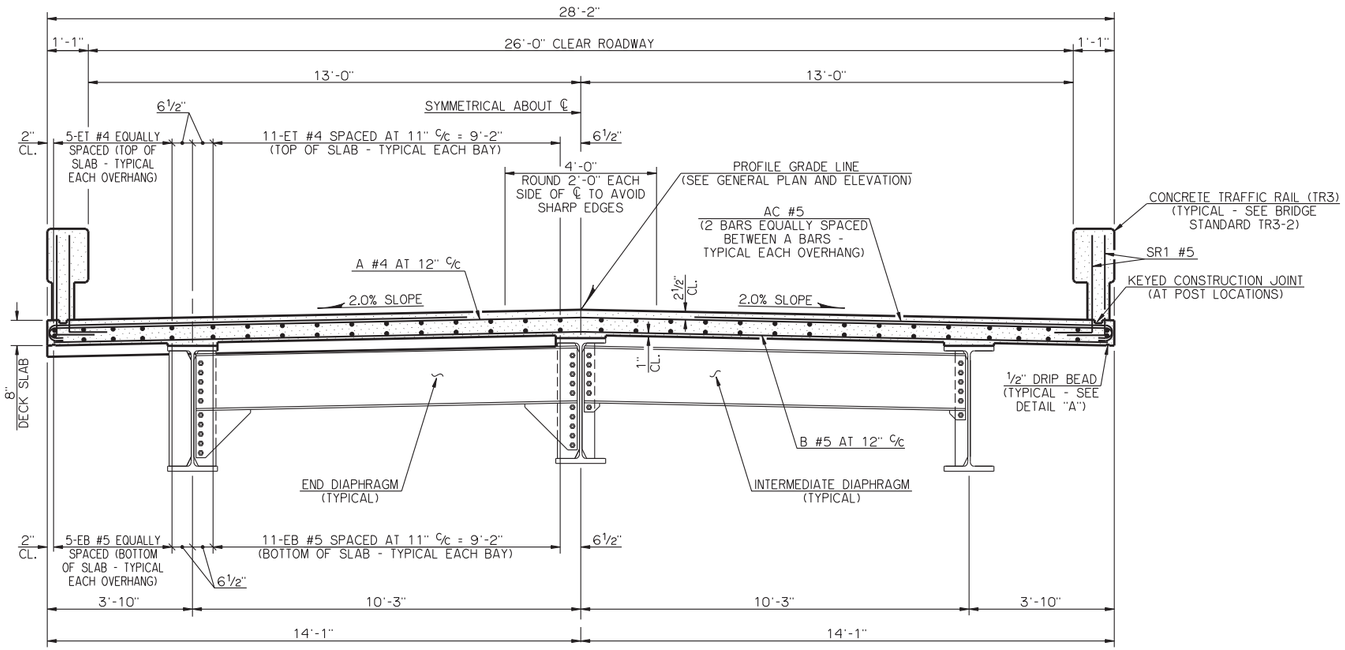

HALF SECTION AT END DIAPHRAGM

HALF SECTION AT INTERMEDIATE DIAPHRAGM

TYPICAL CROSS SECTION

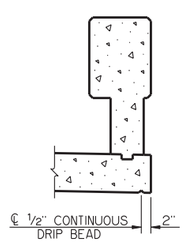

DETAIL "A"

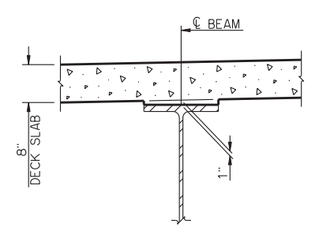

DETAIL OF HAUNCH

PLAN QUANTITIES FOR "CLASS AA CONCRETE" INCLUDE HAUNCHES OVER BEAMS. HAUNCH HEIGHT SHOWN IS AT CENTERLINE BEARING ONLY, MEASURED FROM BOTTOM OF DECK SLAB TO TOP OF BEAM, AND VARIES ACROSS THE SPAN. HAUNCH HEIGHT TO BE DETERMINED AFTER ERECTION OF BEAMS TO PROVIDE FOR DEAD LOAD DEFLECTION AND GRADE ADJUSTMENT, BUT THE PAY QUANTITY WILL BE AS SHOWN IN THE PLANS.

NOTES

ROTATE HOOKS ON AC BARS TO MAINTAIN MINIMUM CLEARANCE.

DO NOT PLACE THE CONCRETE FOR THE DECK SLAB OR APPLY OTHER MASSIVE LOADS TO THE BEAMS, INTERMEDIATE DIAPHRAGMS OR END DIAPHRAGMS UNTIL THE CONCRETE IN THE INTERMEDIATE AND END DIAPHRAGMS HAS BEEN IN PLACE A MINIMUM OF 10 DAYS OR AT THE DISCRETION OF THE ENGINEER. THIS TIME MAY BE SHORTENED IF THE CONCRETE HAS ATTAINED 80% OF THE SPECIFIED COMPRESSIVE STRENGTH.

STAY-IN-PLACE STEEL DECK FORMS MAY BE USED IF THE MINIMUM DECK SLAB THICKNESS OF 8" IS OBTAINED BY MEASURING FROM THE TOP OF THE DECK SLAB TO THE TOP PORTION OF THE STEEL CORRUGATION. NO ADDITIONAL CONCRETE WEIGHT OF THE DECK SLAB IS PERMITTED. ADDITIONAL STEEL WEIGHT OF THE DECK FORMS SHALL NOT EXCEED 5 PSF. STAY-IN-PLACE PRESTRESSED CONCRETE DECK FORMS MAY BE USED IF THE FOLLOWING CONDITIONS ARE MET:

1) SHOP DRAWINGS AND STRUCTURAL CALCULATIONS FOR THE FORMS ARE SUBMITTED TO THE BRIDGE ENGINEER FOR APPROVAL.
2) A NEW STRUCTURAL DESIGN, STRUCTURAL CALCULATIONS, AND A NEW REINFORCING SCHEDULE FOR THE DECK SLAB ARE SUBMITTED TO THE BRIDGE ENGINEER FOR APPROVAL.
3) SHOP DRAWINGS, NEW DECK SLAB REINFORCING SCHEDULE AND STRUCTURAL DESIGNS AND CALCULATIONS SHALL BE PREPARED BY AND SEALED BY A PROFESSIONAL ENGINEER REGISTERED IN THE STATE OF OKLAHOMA.

ALL COSTS ASSOCIATED WITH THE USE OF STAY-IN-PLACE FORMS, INCLUDING ALL PROFESSIONAL SERVICES, MATERIAL, LABOR, EQUIPMENT AND INCIDENTALS, SHALL BE AT THE CONTRACTOR'S EXPENSE. FOR ADDITIONAL INFORMATION CONCERNING THE USE OF STAY-IN-PLACE FORMS, SEE SECTION 502 OF THE STANDARD SPECIFICATIONS.

THE DECK SLAB SHALL BE POURED ONE SPAN AT A TIME. A SPAN ADJACENT TO A FIXED PIER SHALL NOT BE POURED UNTIL AT LEAST 48 HOURS AFTER THE POUR OF ANY ADJACENT SPAN HAS BEEN COMPLETED.

CONSTRUCTION JOINTS AT THE FIXED PIERS SHALL NOT BE KEYED. IN THE EVENT OF AN EMERGENCY, POURING OF THE DECK SLAB MAY BE HALTED WITH A CONSTRUCTION JOINT MADE PERPENDICULAR TO THE DIRECTION OF TRAFFIC AS DIRECTED BY THE ENGINEER. ALL LONGITUDINAL REINFORCING STEEL SHALL BE CONTINUOUS THROUGH ALL CONSTRUCTION JOINTS. NO HEAVY EQUIPMENT WILL BE PERMITTED ON THE FINISHED DECK SLAB WITHIN 5'-0" OF ANY CONSTRUCTION JOINT UNTIL THE DECK SLAB IS IN PLACE ON BOTH SIDES OF THE RESPECTIVE JOINT.

DO NOT SAW-CUT GROOVE THE DECK SLAB WITHIN 6" OF ANY CONSTRUCTION JOINT.

FOR BAR LIST AND DETAILS OF BENT REINFORCING STEEL, SEE DECK SLAB BAR LIST.

APPROVED BY BRIDGE ENGINEER Robert J. Lueck DATE 9-9-2011

OKLAHOMA DEPARTMENT OF TRANSPORTATION
COUNTY BRIDGE STANDARD (ENGLISH)

TYPICAL CROSS SECTION
ROLLED BEAMS

26' CLEAR ROADWAY - CONVENTIONAL - SKEWED 0°

2009 SPECIFICATIONS	CB26-C-SK0-XSECT-RB	01E
		CB-166E

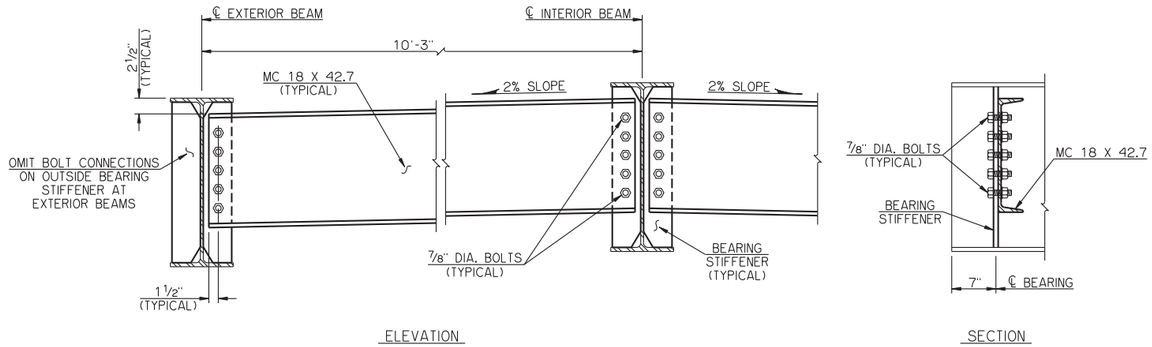

ELEVATION

SECTION

END DIAPHRAGM DETAILS FOR W24 AND W27 BEAMS

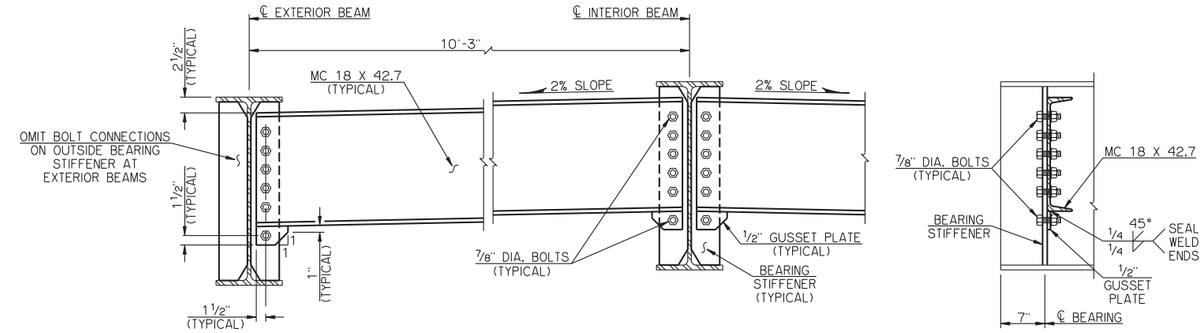

ELEVATION

SECTION

END DIAPHRAGM DETAILS FOR W30 BEAMS

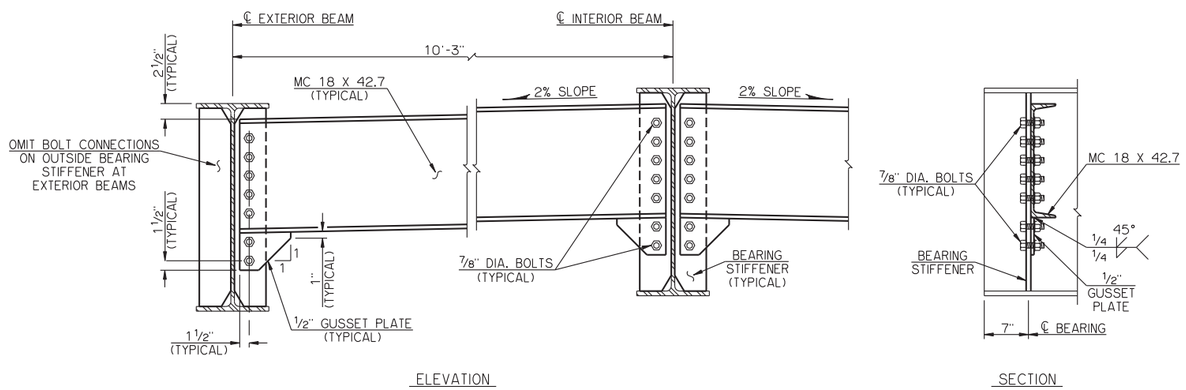

ELEVATION

SECTION

END DIAPHRAGM DETAILS FOR W33 BEAMS

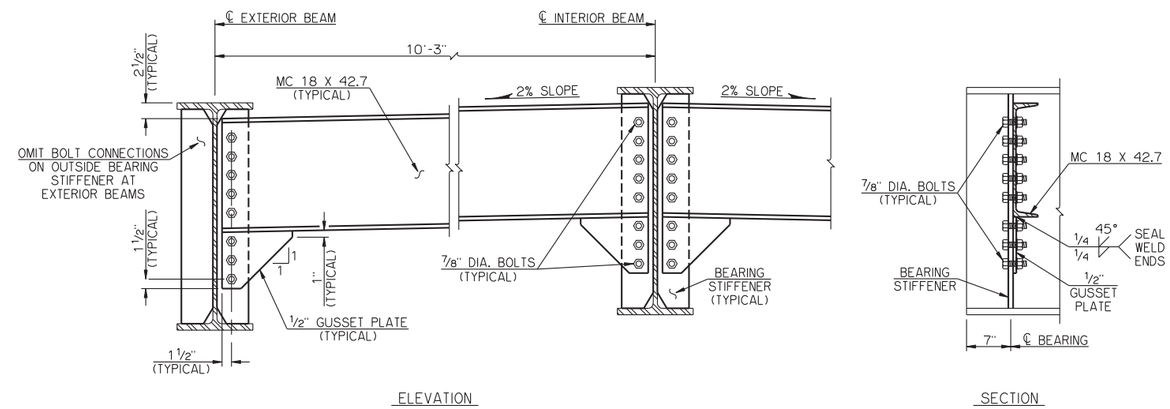

ELEVATION

SECTION

END DIAPHRAGM DETAILS FOR W36 BEAMS

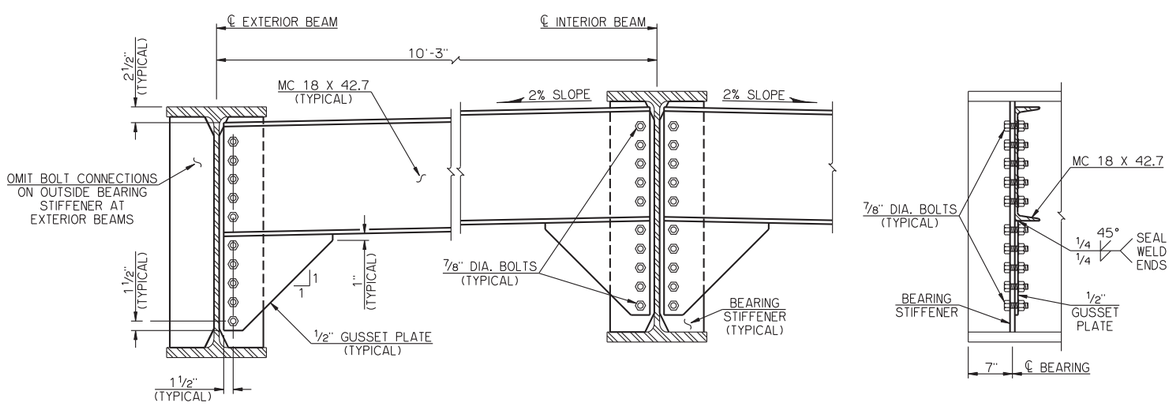

ELEVATION

SECTION

END DIAPHRAGM DETAILS FOR W40 BEAMS

NOTES

STRUCTURAL STEEL FOR CHANNEL DIAPHRAGMS AND GUSSET PLATES SHALL CONFORM TO AASHTO M 270 (ASTM A 709), GRADE 50W, WEATHERING STEEL (CHARPY V-NOTCH TESTING NOT REQUIRED). BOLTS SHALL CONFORM TO AASHTO M 164 (ASTM A 325), TYPE 3. HEX NUTS SHALL CONFORM TO AASHTO M 291 (ASTM A 563), PROPERTY CLASS 8S3 OR 10S3. WASHERS SHALL CONFORM TO AASHTO M 293 (ASTM F 436), TYPE 3.

CONTRACTOR MAY ELECT TO FABRICATE A BENT PLATE DIAPHRAGM IN LIEU OF CHANNEL AND GUSSET PLATE. PLATE SHALL BE ½" MINIMUM THICKNESS AND FORMED IN THE SHAPE OF CHANNEL WITH MINIMUM 4" FLANGES. DEPTH OF BENT PLATE DIAPHRAGM SHALL BE EQUAL TO OR GREATER THAN THAT SHOWN FOR COMBINED CHANNEL AND GUSSET PLATE. COST TO CONSTRUCT BENT PLATE DIAPHRAGM SHALL BE AT THE CONTRACTOR'S EXPENSE.

APPROVED BY BRIDGE ENGINEER Robert J Busch DATE 9-9-2011

OKLAHOMA DEPARTMENT OF TRANSPORTATION
COUNTY BRIDGE STANDARD (ENGLISH)

END DIAPHRAGM DETAILS ROLLED BEAMS

26' CLEAR ROADWAY - CONVENTIONAL - SKEWED 0°

2009 SPECIFICATIONS	CB26-C-SKO-DIA-END-RB	01E

CB-179E

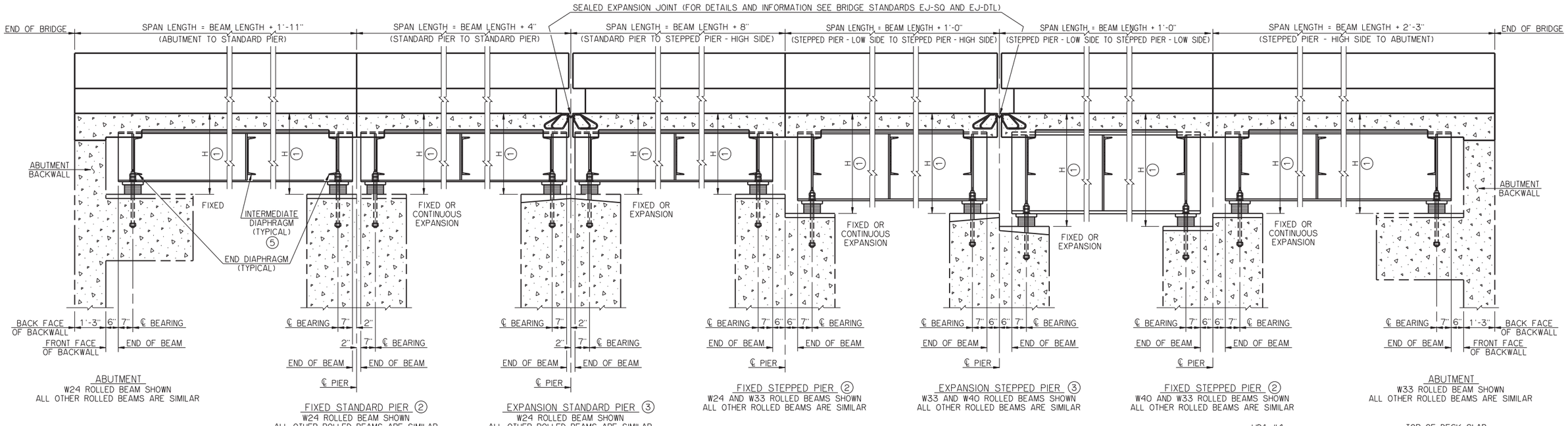

LONGITUDINAL SECTION

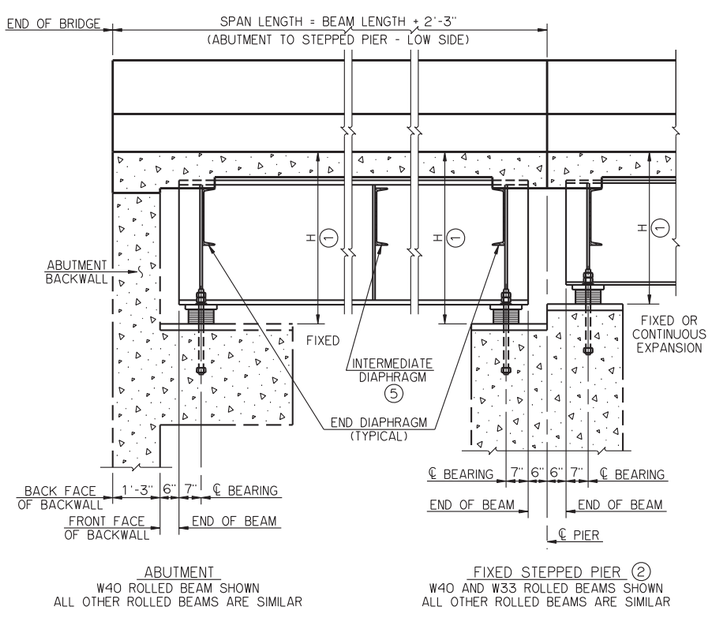

LONGITUDINAL SECTION

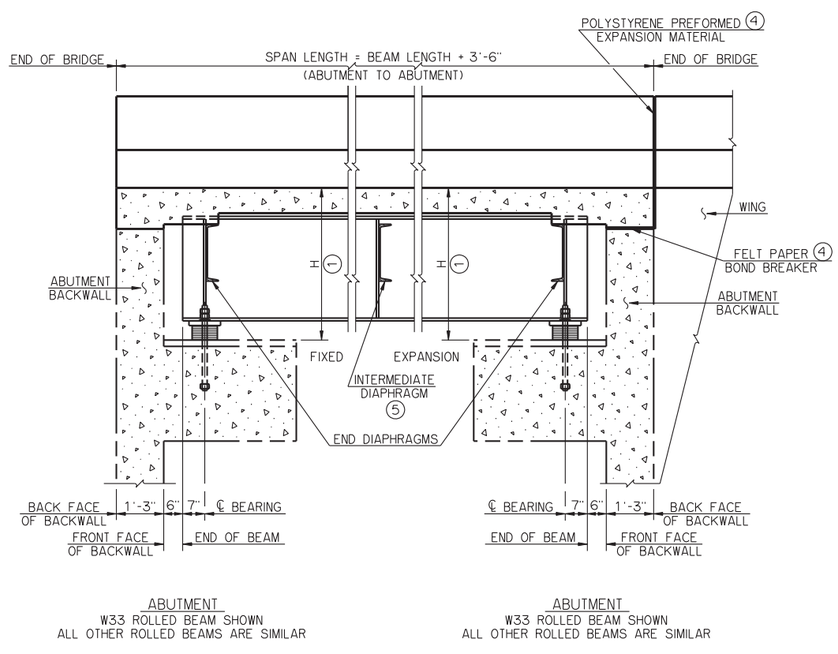

LONGITUDINAL SECTION

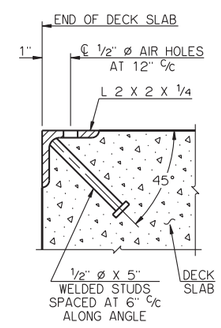

DETAIL OF STEEL ANGLE BUMPER

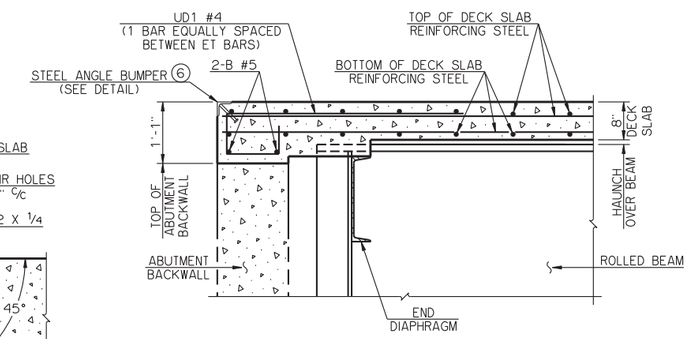

TYPICAL SLAB REINFORCING AT ABUTMENT BACKWALL

SCHEDULE FOR DIMENSION H	
SPAN	H
30'	3'-2 1/16"
35'	3'-4 13/16"
40'	3'-7 5/8"
45'	3'-7 3/4"
50'	3'-7 15/16"
55'	3'-11"
60'	4'-1 11/16"
65'	4'-2"
70'	4'-2 1/8"
75'	4'-5 1/8"
80'	4'-4 5/16"
85'	4'-4 5/8"
90'	4'-5"
95'	4'-5 5/16"
100'	4'-5 5/16"

1. DIMENSION IS FROM TOP OF DECK SLAB TO BOTTOM OF BEARING ASSEMBLY AT ℄ BEARING.
2. FIXED PIER DESIGNATION INDICATES CONTINUOUS DECK SLAB OVER PIER. ENGINEER SHALL DETERMINE WHETHER FIXED OR EXPANSION BEARING ASSEMBLIES ARE REQUIRED.
3. EXPANSION PIER DESIGNATION INDICATES EXPANSION JOINT IN DECK SLAB OVER PIER. EXPANSION PIER REQUIRES EXPANSION BEARING ASSEMBLIES IN AT LEAST ONE OF THE SPANS. ENGINEER SHALL DETERMINE WHETHER FIXED OR EXPANSION BEARING ASSEMBLIES ARE REQUIRED IN THE ADJACENT SPAN.
4. AT EXPANSION ABUTMENTS, FELT PAPER BOND BREAKER SHALL BE PLACED ON TOP OF THE BACKWALL FOR THE FULL WIDTH OF THE DECK SLAB, AND 3/4" THICK POLYSTYRENE PREFORMED EXPANSION MATERIAL SHALL BE PLACED BETWEEN THE END OF THE DECK SLAB AND THE ENDS OF THE WINGS AND BETWEEN THE ENDS OF THE CONCRETE TRAFFIC RAILS (TR3) ON THE DECK SLAB AND WINGS. ALL COST TO BE INCLUDED IN OTHER ITEMS OF WORK.
5. ONLY ONE INTERMEDIATE DIAPHRAGM SHOWN. SEE "ROLLED BEAM DETAILS" FOR ACTUAL NUMBER OF INTERMEDIATE DIAPHRAGMS.
6. STEEL ANGLE BUMPERS SHALL BE OMITTED FROM ENDS OF DECK SLABS ADJOINING AN APPROACH ROADWAY COMPRISED OF ASPHALT OR P.C. CONCRETE PAVEMENT.

APPROVED BY BRIDGE ENGINEER Robert J. Lynch DATE 9-9-2011

OKLAHOMA DEPARTMENT OF TRANSPORTATION
COUNTY BRIDGE STANDARD (ENGLISH)

LONGITUDINAL SECTION ROLLED BEAMS

26' CLEAR ROADWAY - CONVENTIONAL - SKEWED 0°

2009 SPECIFICATIONS | CB26-C-SKO-LSECT-RB | 01E

CB-170E

BAR LIST - DECK SLAB

			SPAN TYPE											
			ABUTMENT TO ABUTMENT		ABUTMENT TO FIXED PIER		ABUTMENT TO EXPANSION PIER		FIXED PIER TO FIXED PIER		FIXED PIER TO EXPANSION PIER		EXPANSION PIER TO EXPANSION PIER	
MARK	SIZE	FORM	NUMBER	LENGTH	NUMBER	LENGTH	NUMBER	LENGTH	NUMBER	LENGTH	NUMBER	LENGTH	NUMBER	LENGTH
A	#4	BNT.	SL + 2 (1)	28'-10"	SL + 2 (1)	28'-10"	SL + 2 (1)	28'-10"	SL + 2 (1)	28'-10"	SL + 2 (1)	28'-10"	SL + 2 (1)	28'-10"
AC	#5	BNT.	4 x (SL + 1) (1)	11'-6"	4 x (SL + 1) (1)	11'-6"	4 x (SL + 1) (1)	11'-6"	4 x (SL + 1) (1)	11'-6"	4 x (SL + 1) (1)	11'-6"	4 x (SL + 1) (1)	11'-6"
B	#5	STR.	SL + 6 (1)	27'-10"	SL + 4 (1)	27'-10"	SL + 4 (1)	27'-10"	SL + 2 (1)	27'-10"	SL + 2 (1)	27'-10"	SL + 2 (1)	27'-10"
(2) EB	#5	STR.	32	SPAN LENGTH - 2"	32	SPAN LENGTH - 1" (3)	32	SPAN LENGTH - 3"	32	SPAN LENGTH (3)	32	SPAN LENGTH - 2" (3)	32	SPAN LENGTH - 4"
(2) ET	#4	STR.	32	SPAN LENGTH - 2"	32	SPAN LENGTH - 1" (3)	32	SPAN LENGTH - 3"	32	SPAN LENGTH (3)	32	SPAN LENGTH - 2" (3)	32	SPAN LENGTH - 4"
SR1	#5	BNT.	36 x IP + 7.5 x EP (4)	3'-10"	36 x IP + 7.5 x EP (4)	3'-10"	36 x IP + 7.5 x EP (4)	3'-10"	36 x IP + 7.5 x EP (4)	3'-10"	36 x IP + 7.5 x EP (4)	3'-10"	36 x IP + 7.5 x EP (4)	3'-10"
UD1	#4	BNT.	62	6'-3"	31	6'-3"	31	6'-3"	-	-	-	-	-	-

(1) SL = NUMBER OF FEET IN SPAN LENGTH. EXAMPLE: FOR SPAN LENGTH = 31'-8", SL = 31.

(2) THE LENGTHS SHOWN DO NOT INCLUDE LAP SPLICES. THE LENGTH OF ALL REQUIRED LAP SPLICES SHALL BE ADDED TO THE LENGTHS SHOWN. THE MINIMUM LAP SPLICE LENGTH FOR #5 REINFORCING STEEL BARS SHALL BE 2'-6", AND THE MINIMUM LAP SPLICE LENGTH FOR #4 REINFORCING STEEL BARS SHALL BE 1'-8". THE LAP SPLICES SHALL BE STAGGERED.

(3) THE LONGITUDINAL REINFORCING STEEL SHALL BE CONTINUOUS THRU ALL CONSTRUCTION JOINTS AT FIXED PIERS. TO DETERMINE THE ACTUAL REINFORCING STEEL BAR LENGTH, COMBINE THE LENGTHS SHOWN FOR ALL SPAN TYPES OCCURRING BETWEEN AN ABUTMENT AND EXPANSION PIER OR BETWEEN TWO EXPANSION PIERS CONTAINED WITHIN THE BRIDGE INCLUDING ALL REQUIRED LAP SPLICE LENGTHS. NO LAP SPLICE SHALL BE PLACED WITHIN 10'-0" OF THE CENTERLINE OF FIXED PIERS.

(4) CALCULATION IN TABLE SHALL BE ROUNDED UP TO THE NEAREST NUMBER OF BARS.

IP = NUMBER OF INTERIOR POSTS IN CONCRETE TRAFFIC RAIL (TR3) CALCULATED AS FOLLOWS:

FOR ABUTMENT TO EXPANSION PIER OR FIXED PIER TO EXPANSION PIER:
IP = INTEGER AMOUNT OF (SPAN LENGTH - 15.375)/10

FOR EXPANSION PIER TO EXPANSION PIER:
IP = INTEGER AMOUNT OF (SPAN LENGTH - 15.75)/10

FOR ALL OTHER CASES:
IP = INTEGER AMOUNT OF (SPAN LENGTH - 15)/10

EP = TOTAL LENGTH OF END POSTS IN CONCRETE TRAFFIC RAIL (TR3) CALCULATED AS FOLLOWS:

FOR ABUTMENT TO EXPANSION PIER OR FIXED PIER TO EXPANSION PIER:
EP = SPAN LENGTH - 5.375 - (10 x IP)

FOR EXPANSION PIER TO EXPANSION PIER:
EP = SPAN LENGTH - 5.75 - (10 x IP)

FOR ALL OTHER CASES:
EP = SPAN LENGTH - 5 - (10 x IP)

EXAMPLE: FOR FIXED PIER TO EXPANSION PIER WITH SPAN LENGTH = 80'-4"
IP = (80.34 - 15.375)/10 = 6
EP = 80.34 - 5.375 - (10 x 6) = 14.97

FOR ADDITIONAL DETAILS AND INFORMATION, SEE BRIDGE STANDARD TR3-2. SR1 BARS SHALL NOT BE EPOXY COATED AS INDICATED ON THE BRIDGE STANDARD.

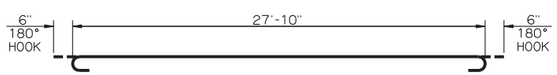

A #4 X 28'-10"

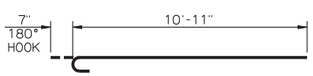

AC #5 X 11'-6"

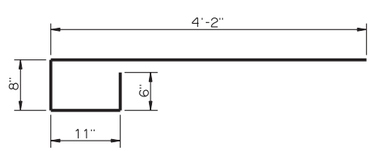

UD1 #4 X 6'-3"

DETAILS OF BENT REINFORCING STEEL

APPROVED BY BRIDGE ENGINEER Robert J. Rusch DATE 9-9-2011

OKLAHOMA DEPARTMENT OF TRANSPORTATION
COUNTY BRIDGE STANDARD (ENGLISH)

DECK SLAB BAR LIST

26' CLEAR ROADWAY - CONVENTIONAL - SKEWED 0°

2009 SPECIFICATIONS | CB26-C-SK0-DKSLB-BLIST | 01E

CB-173E

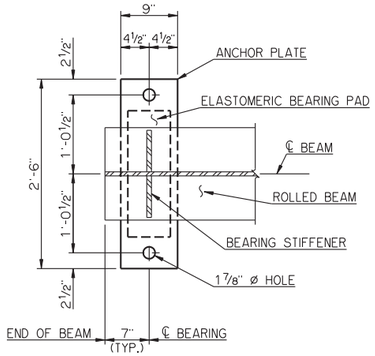

FIXED BEARING PLAN
ANCHOR BOLT ASSEMBLIES NOT SHOWN

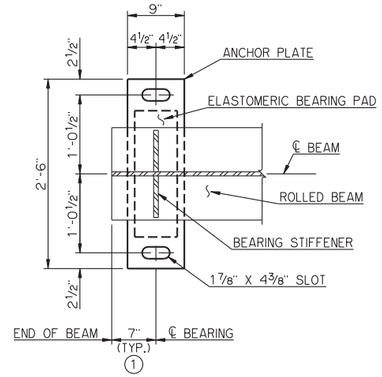

EXPANSION BEARING PLAN
ANCHOR BOLT ASSEMBLIES NOT SHOWN

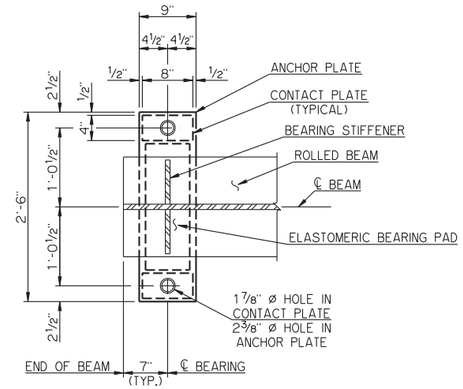

FIXED BEARING PLAN
ANCHOR BOLT ASSEMBLIES NOT SHOWN

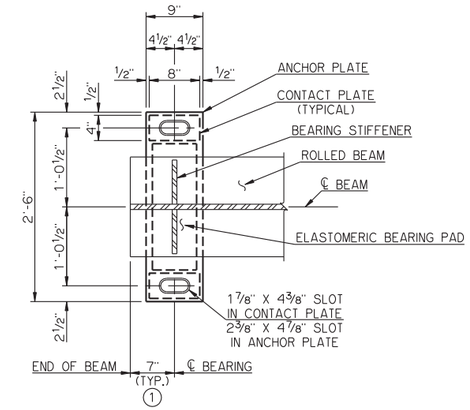

EXPANSION BEARING PLAN
ANCHOR BOLT ASSEMBLIES NOT SHOWN

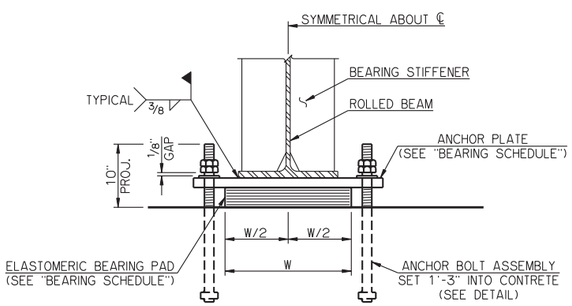

END VIEW

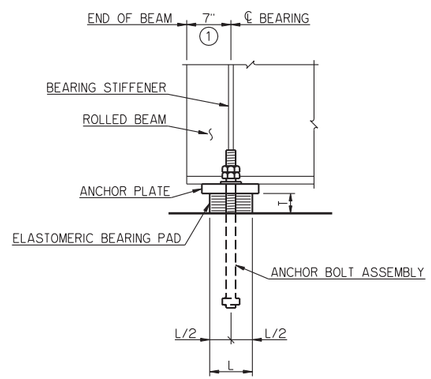

SIDE VIEW

BEARING DETAILS
30' THRU 70' SPANS AND 80' SPAN

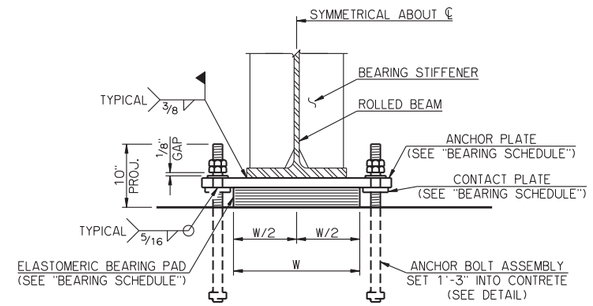

END VIEW

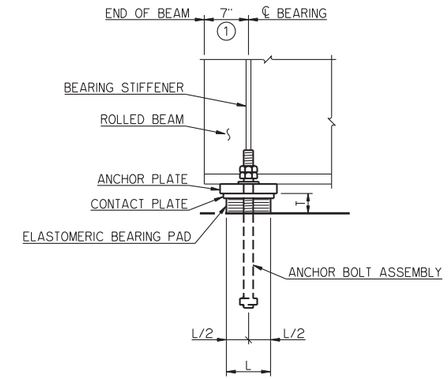

SIDE VIEW

BEARING DETAILS
75' SPAN AND 85' THRU 100' SPANS

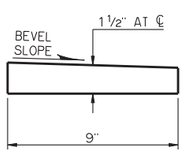

BEVELED ANCHOR PLATE DETAIL

BEVELED ANCHOR PLATE IS REQUIRED WHEN ANGLE BETWEEN UNDERSIDE OF BEAM AND HORIZONTAL EXCEEDS 1.0%. BEVEL SLOPE TO MATCH ANGLE BETWEEN BEAM AND HORIZONTAL. PAINT THICKER EDGE RED.

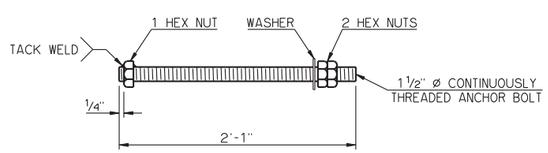

ANCHOR BOLT ASSEMBLY DETAIL

BEARING SCHEDULE

SPAN	ANCHOR PLATE	CONTACT PLATE	60 DUROMETER ELASTOMERIC BEARING PAD				MAXIMUM EXPANSION LENGTH WITHOUT BONDING
			SIZE (T X L X W)	COVER LAYER	INNER LAYER	LAMINATE PLATE	
30'	1½" X 9" X 2'-6"	---	3⅝" X 6½" X 1'-4"	2-¼"	6-⅜"	7-⅛"	65'
35'	1½" X 9" X 2'-6"	---	3⅝" X 6½" X 1'-4"	2-¼"	6-⅜"	7-⅛"	80'
40'	1½" X 9" X 2'-6"	---	3⅝" X 6¾" X 1'-4"	2-¼"	6-⅜"	7-⅛"	90'
45'	1½" X 9" X 2'-6"	---	3⅝" X 6¾" X 1'-4"	2-¼"	6-⅜"	7-⅛"	100'
50'	1½" X 9" X 2'-6"	---	3⅝" X 7" X 1'-4"	2-¼"	6-⅜"	7-⅛"	110'
55'	1½" X 9" X 2'-6"	---	3⅝" X 7" X 1'-4"	2-¼"	6-⅜"	7-⅛"	120'
60'	1½" X 9" X 2'-6"	---	3⅝" X 7" X 1'-5"	2-¼"	6-⅜"	7-⅛"	125'
65'	1½" X 9" X 2'-6"	---	3⅝" X 7¼" X 1'-5"	2-¼"	6-⅜"	7-⅛"	135'
70'	1½" X 9" X 2'-6"	---	3⅝" X 7¼" X 1'-5"	2-¼"	6-⅜"	7-⅛"	145'
75'	1½" X 9" X 2'-6"	½" X 4" X 8"	3⅝" X 7¼" X 1'-5"	2-¼"	6-⅜"	7-⅛"	150'
80'	1½" X 9" X 2'-6"	---	3⅛" X 6¾" X 1'-8"	2-¼"	5-⅜"	6-⅛"	130'
85'	1½" X 9" X 2'-6"	½" X 4" X 8"	3⅛" X 6¾" X 1'-8"	2-¼"	5-⅜"	6-⅛"	130'
90'	1½" X 9" X 2'-6"	½" X 4" X 8"	3⅛" X 6¾" X 1'-8"	2-¼"	5-⅜"	6-⅛"	130'
95'	1½" X 9" X 2'-6"	½" X 4" X 8"	3⅛" X 7" X 1'-8"	2-¼"	5-⅜"	6-⅛"	130'
100'	1½" X 9" X 2'-6"	¾" X 4" X 8"	3⅛" X 7" X 1'-8"	2-¼"	5-⅜"	6-⅛"	130'

NOTES

STRUCTURAL STEEL FOR ANCHOR PLATES, CONTACT PLATES AND CONTINUOUSLY THREADED ANCHOR BOLTS SHALL CONFORM TO AASHTO M 270 (ASTM A 709), GRADE 50W, WEATHERING STEEL (CHARPY V-NOTCH TESTING NOT REQUIRED). HEX NUTS SHALL CONFORM TO AASHTO M 291 (ASTM A 563). WASHERS SHALL CONFORM TO AASHTO M 293 (ASTM F 436), TYPE 3. ANCHOR BOLT ASSEMBLIES SHALL BE GALVANIZED, AND ALL OTHER STEEL PARTS COMPRISING THE BEARING ASSEMBLIES SHALL BE PAINTED WITH THE IZ-E-U PAINT SYSTEM.

(1) ANCHOR BOLTS SHALL BE CENTERED IN SLOTS DURING SETTING OF BEAMS. DIMENSION MAY VARY AT EXPANSION BEARING DEPENDING ON TEMPERATURE AT THE TIME OF BEAM SETTING.

APPROVED BY BRIDGE ENGINEER Robert J. Lusch DATE 9-9-2011

OKLAHOMA DEPARTMENT OF TRANSPORTATION
COUNTY BRIDGE STANDARD (ENGLISH)

BEARING DETAILS
ROLLED BEAMS

26' CLEAR ROADWAY - CONVENTIONAL - SKEWED 0° AND 30°

2009 SPECIFICATIONS | CB26-C-SK0..30-BRG-RB | 01E

CB-363E

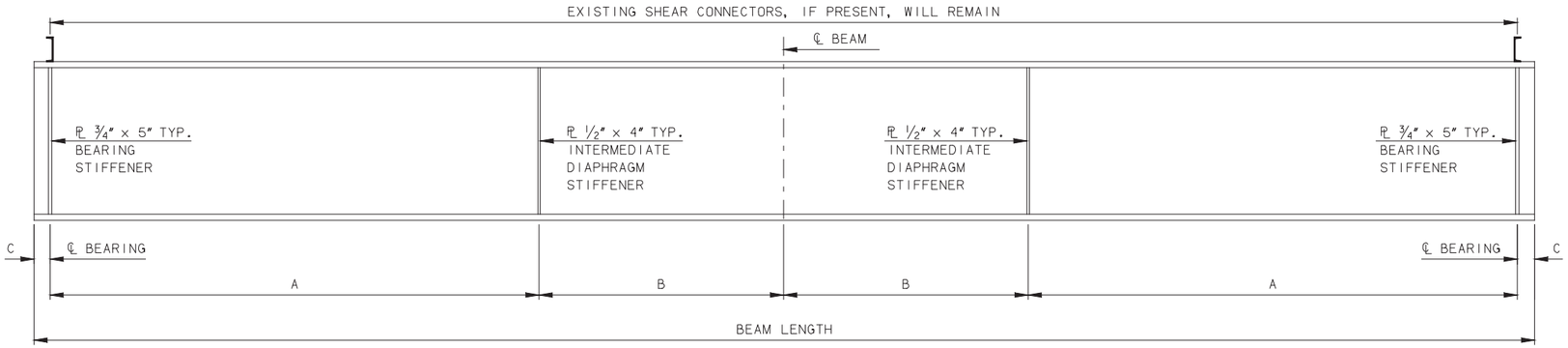

W33x130, W33x141, W36x135, or W36x150

COMPOSITE SECTION BEAM SCHEDULE - CONCRETE ABUTMENT						
BEAM	MAX. SPAN	BEAM LENGTH	A	B	C	LFD OPERATING RATING
W33x130	55'-0"	53'-2"	17'-4"	8'-8"	7"	HS 40.2
W33x141	60'-0"	58'-2"	19'-0"	9'-6"	7"	HS 37.4
W36x135	60'-0"	58'-2"	19'-0"	9'-6"	7"	HS 36.8
W36x150	65'-0"	63'-2"	20'-8"	10"-4"	7"	HS 38.2

NON-COMPOSITE SECTION BEAM SCHEDULE - CONCRETE ABUTMENT						
BEAM	MAX. SPAN	BEAM LENGTH	A	B	C	LFD OPERATING RATING
W33x130	40'-0"	38'-2"	12'-4"	6'-2"	7"	HS 41.2
W33x141	45'-0"	43'-2"	14'-0"	7'-0"	7"	HS 37.2
W36x135	45'-0"	43'-2"	14'-0"	7'-0"	7"	HS 36.0
W36x150	45'-0"	43'-2"	14'-0"	7'-0"	7"	HS 42.6

COMPOSITE SECTION BEAM SCHEDULE - STEEL ABUTMENT						
BEAM	MAX. SPAN	BEAM LENGTH	A	B	C	LFD OPERATING RATING
W33x130	55'-0"	54'-10"	17'-11"	9'-0"	6"	HS 40.2
W33x141	60'-0"	59'-10"	19'-7"	9'-10"	6"	HS 37.4
W36x135	60'-0"	59'-10"	19'-7"	9'-10"	6"	HS 36.8
W36x150	65'-0"	64'-10"	21'-3"	10"-8"	6"	HS 38.2

NON-COMPOSITE SECTION BEAM SCHEDULE - STEEL ABUTMENT						
BEAM	MAX. SPAN	BEAM LENGTH	A	B	C	LFD OPERATING RATING
W33x130	40'-0"	39'-10"	12'-11"	6'-6"	6"	HS 41.2
W33x141	45'-0"	44'-10"	14'-7"	7'-4"	6"	HS 37.2
W36x135	45'-0"	44'-10"	14'-7"	7'-4"	6"	HS 36.0
W36x150	45'-0"	44'-10"	14'-7"	7'-4"	6"	HS 42.6

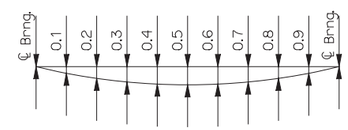

DEAD LOAD DEFLECTION DIAGRAM

COMPOSITE DEFLECTION SCHEDULE							
DUE TO SIP FORMS, DECK SLAB, HAUNCH, AND TR3 RAIL DEFLECTION							
BEAM	MAX. SPAN	℄ BRG.	0.1 & 0.9	0.2 & 0.8	0.3 & 0.7	0.4 & 0.6	0.5
W33x130	55'-0"	0.00"	0.27"	0.48"	0.63"	0.72"	0.75"
W33x141	60'-0"	0.00"	0.35"	0.62"	0.81"	0.93"	0.97"
W36x135	60'-0"	0.00"	0.33"	0.59"	0.77"	0.89"	0.92"
W36x150	65'-0"	0.00"	0.38"	0.68"	0.91"	1.06"	1.13"

NON-COMPOSITE DEFLECTION SCHEDULE							
DUE TO SIP FORMS, DECK SLAB, HAUNCH, AND TR3 RAIL DEFLECTION							
BEAM	MAX. SPAN	℄ BRG.	0.1 & 0.9	0.2 & 0.8	0.3 & 0.7	0.4 & 0.6	0.5
W33x130	40'-0"	0.00"	0.08"	0.14"	0.19"	0.22"	0.23"
W33x141	45'-0"	0.00"	0.12"	0.21"	0.27"	0.31"	0.32"
W36x135	45'-0"	0.00"	0.11"	0.20"	0.26"	0.30"	0.31"
W36x150	45'-0"	0.00"	0.10"	0.17"	0.22"	0.26"	0.27"

NOTES:

- TERMINATE FILLET WELDS ⅜" FROM THE EDGES OF CLIPPED CORNERS AND NON-CLIPPED CORNERS OF STIFFENER PLATES.
- THE LFD OPERATING RATING SHOWN IN THE TABLE APPLIES ONLY TO THE ROLLED BEAMS OF A BRIDGE CONSTRUCTED IN STRICT CONFORMANCE TO ALL RELEVANT DETAILS CONTAINED IN THESE COUNTY BRIDGE STANDARDS AND TO THE ODOT STANDARD SPECIFICATIONS.
- DEAD LOAD DEFLECTIONS SHOWN AT TENTH POINTS ARE THE THEORETICAL BEAM DEFLECTIONS DUE TO A 5 PSF SIP FORMS ALLOWANCE, DECK SLAB, HAUNCH AND CONCRETE TRAFFIC RAIL (TR-3). THE DEAD LOAD DEFLECTIONS SHALL BE ACCOUNTED FOR IN THE HAUNCH DEPTH CALCULATIONS. DEAD LOAD DEFLECTIONS ABOVE ARE BASED UPON THE MAXIMUM SPAN AS SHOWN IN THE TABLES. SHOULD THE BEAMS BE USED FOR SPANS SHORTER THAN THE MAXIMUM SHOWN, DEAD LOAD DEFLECTIONS SHALL BE RECALCULATED AND APPROVED BY THE ENGINEER PRIOR TO SETTING THE HAUNCH DEPTH.
- COMPOSITE SECTION VALUES SHOULD BE USED WHEN SHEAR CONNECTORS ARE PRESENT AT 12" MAXIMUM SPACING. USE NON-COMPOSITE VALUES WHEN BEAMS DO NOT HAVE SHEAR CONNECTORS, OR WHEN THEIR SPACING EXCEEDS 12".
- BOLTS SHALL CONFORM TO AASHTO M 164 (ASTM A 325), TYPE 3. HEX NUTS SHALL CONFORM TO AASHTO M 291 (ASTM A 563), PROPERTY CLASS 8S3 OR 10S3. WASHERS SHALL CONFORM TO AASHTO M 293 (ASTM F 436), TYPE 3.

APPROVED BY BRIDGE ENGINEER Robert J. Rusch DATE 4-27-2012

OKLAHOMA DEPARTMENT OF TRANSPORTATION
COUNTY BRIDGE STANDARDS (ENGLISH)

ROLLED BEAM DETAILS
26' CLEAR ROADWAY, 0° SKEW

2009 SPECIFICATIONS | CB26-XTBM-SKO-DTL | 00E

CB-976E

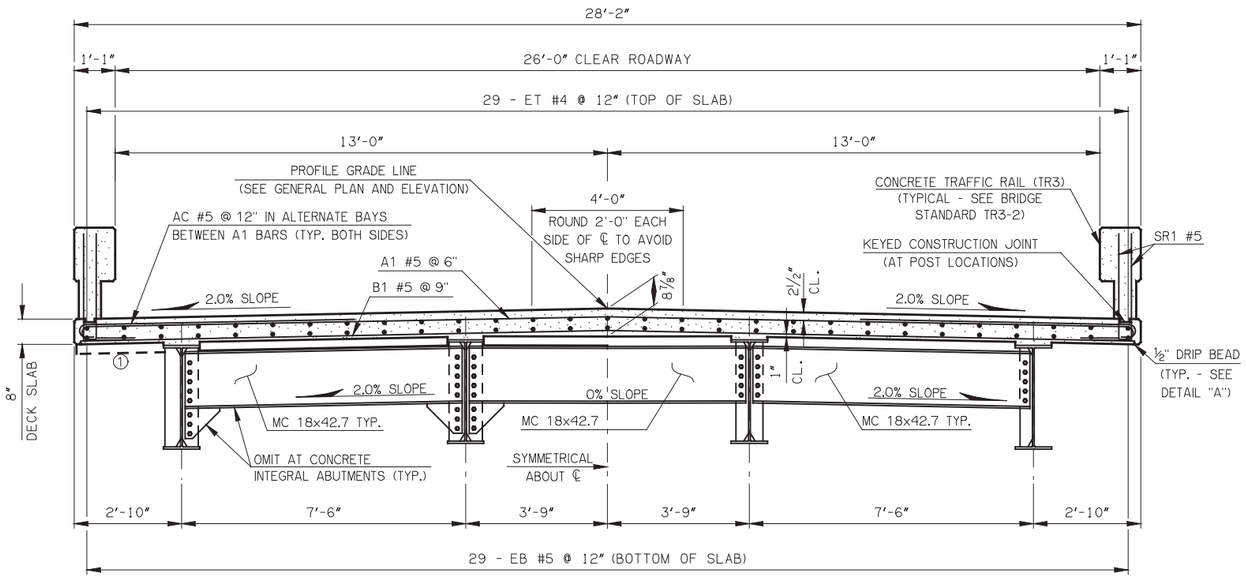

HALF SECTION AT END DIAPHRAGM

① REFER TO APPLICABLE STANDARDS FOR ADDITIONAL DECK REINFORCING AND DIMENSIONS NOT SHOWN HERE.

HALF SECTION AT INTERMEDIATE DIAPHRAGM

TYPICAL CROSS SECTION

NOTE: W33x141 BEAMS SHOWN, W33x130, W36x135 OR W36x150 SIMILAR

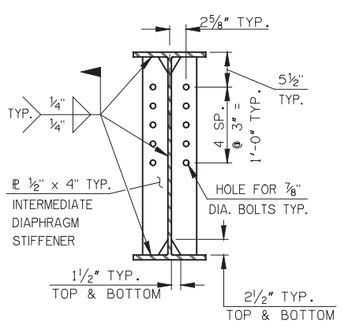

INTERMEDIATE DIAPHRAGM STIFFENER DETAILS

DETAIL SHOWN AT INTERIOR BEAM. OMIT INTERMEDIATE DIAPHRAGM STIFFENERS AT OUTSIDE FACE OF EXTERIOR BEAM.

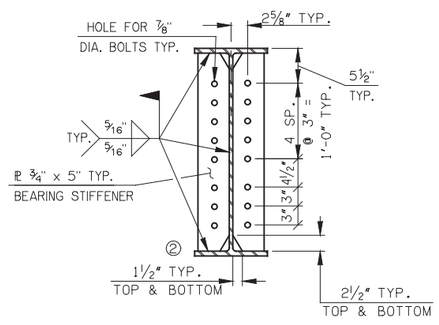

BEARING STIFFENER DETAILS

DETAIL SHOWN AT INTERIOR BEAM. OMIT BOLT HOLES IN BEARING STIFFENERS AT OUTSIDE FACE OF EXTERIOR BEAM. OMIT BOLT HOLES IN BEARING STIFFENERS AT ABUTMENT DIAPHRAGMS OF INTEGRAL BRIDGES

② MILL TO BEAR AT BOTTOM FLANGE

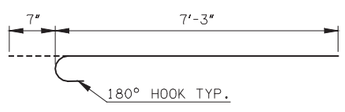

AC #5 x 7'-10"

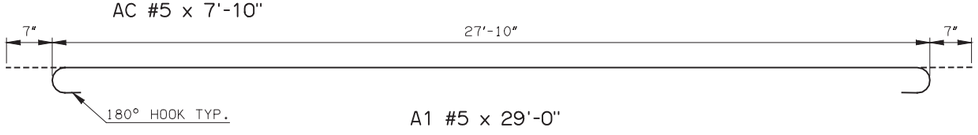

A1 #5 x 29'-0"

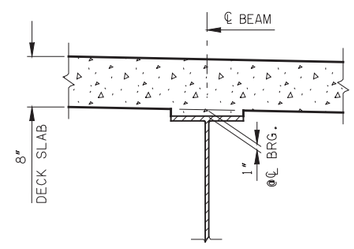

DETAIL OF HAUNCH

HAUNCH HEIGHT SHOWN IS AT CENTERLINE BEARING ONLY, MEASURED FROM BOTTOM OF DECK SLAB TO TOP OF BEAM, AND VARIES ACROSS THE SPAN. HAUNCH HEIGHT TO BE DETERMINED AFTER ERECTION OF BEAMS TO PROVIDE FOR DEAD LOAD DEFLECTION AND GRADE ADJUSTMENT.

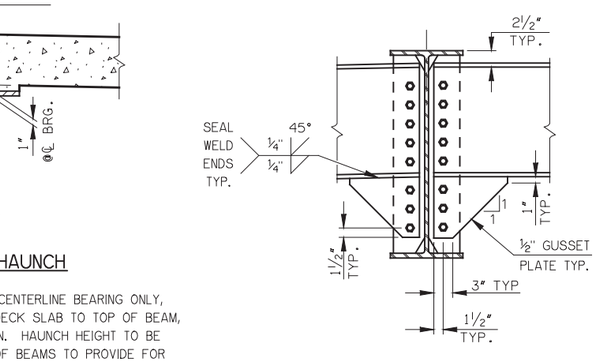

GUSSET DETAILS

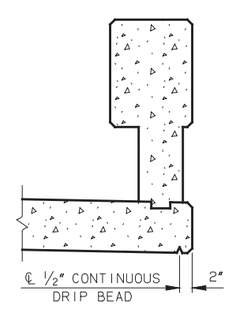

DETAIL "A"

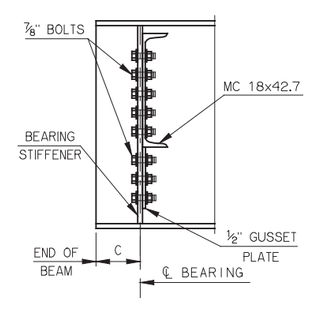

END DIAPHRAGM SECTION

(SEE BEAM DETAILS FOR DIMENSION "C")

DESIGN DATA

CLASS AA CONCRETE	fc' = 4 ksi
REINFORCING STEEL, AASHTO M 31 (GRADE 60)	fy = 60 ksi
NEW STRUCTURAL STEEL, AASHTO M 270 (GRADE 36 MIN.)	fy = 36 ksi MIN.
EXISTING STRUCTURAL STEEL, GRADE 36	fy = 36 ksi

LOADING -

HL-93

20 PSF FUTURE WEARING SURFACE

5 PSF STAY-IN-PLACE FORMS

DESIGN -

AASHTO LRFD BRIDGE DESIGN SPECIFICATIONS, 5TH EDITION WITH 2010 INTERIMS, EXCEPT AS MODIFIED BY CURRENT ODOT BRIDGE DIVISION DESIGN POLICIES.

ANSI/AASHTO/AWS D1.5 BRIDGE WELDING CODE

LFD OPERATING RATING - REFERENCE BEAM DETAIL SHEETS

NOTES

THE DESIGN SHEETS "TYPICAL CROSS SECTION, ROLLED BEAMS, 26' CLEAR ROADWAY, 0° SKEW" AND "ROLLED BEAM DETAILS, 26' CLEAR ROADWAY, 0° SKEW" ARE FOR USE IN CONSTRUCTION OF SINGLE SPAN BRIDGES WITH EITHER CONCRETE INTEGRAL ABUTMENTS OR STEEL CONVENTIONAL ABUTMENTS UTILIZING THE OLD I-40 CROSSTOWN SALVAGED BEAMS SIZES W33X130, W33X141, W36X135 OR W36X150.

1. SINGLE SPAN INTEGRAL CONCRETE ABUTMENT BRIDGES:
   THE FOLLOWING 2009 LRFD COUNTY BRIDGE STANDARDS, OR PARTS OF THEM, ARE REQUIRED IN ADDITION TO THE DESIGN SHEETS MENTIONED ABOVE:
   CB26-I-SKO-LSECT-RB - LONGITUDINAL SECTION ROLLED BEAMS
   CB26-I-SKO-DKSLB-BLIST-RB - DECK SLAB BAR LIST ROLLED BEAMS
   CB26-I-SKO-ABUT-RB-55100 - ABUTMENT DETAILS 55' THRU 100' ROLLED BEAMS
   CB26-I-SKO-DIA-ABUT-RB-55100 - ABUTMENT DIAPHRAGM DETAILS 55' THRU 100' ROLLED BEAMS
   CB26-I-SKO-BRG-RB - BEARING DETAILS ROLLED BEAMS
   CB26-I-SKO-AS - APPROACH SLAB DETAILS
   CB26..32-I-SKO-WING-RB-55100 - WING DETAILS 55' THRU 100' ROLLED BEAMS
   CB26..32-I-SKO-ABUT-MISC - SUBSTRUCTURE EXCAVATION AND PIPE UNDERDRAIN ASSEMBLY DETAILS
   CB26..32-C..I-SKO..30-RB-BRACING - ROLLED BEAM BRACING DETAILS FOR PLACEMENT OF DECK SLAB CONCRETE
   CB26..32-C..I-SKO..30-GRAU-BC - GUARDRAIL ANCHOR UNIT - BRIDGE CONNECTION
   (THESE STANDARDS ARE BASED ON A 3-BEAM SYSTEM. SOME OF THEM WILL, THEREFORE, NEED TO BE MODIFIED FOR USE ON A 4-BEAM SYSTEM.)

2. SINGLE SPAN CONVENTIONAL STEEL ABUTMENT BRIDGES:
   OBSOLETE COUNTY BRIDGE STANDARD IBN-1 AND IBNA-1, OR PARTS OF THEM, ARE REQUIRED IN ADDITION TO THE DESIGN SHEETS "TYPICAL CROSS SECTION, ROLLED BEAMS, 26' CLEAR ROADWAY, 0° SKEW" AND "ROLLED BEAM DETAILS, 26' CLEAR ROADWAY, 0° SKEW".
   STANDARD IBNA-1 WILL NEED TO BE MODIFIED AS FOLLOWS:
   SUBSTITUTE AN HP 12x53 PILE OF GRADE 50 IN PLACE OF THE HP 10x42 PILE SHOWN FOR THE BENT CAP. VERTICAL HP 10x42 PILES SHALL BE GRADE 50. WELD BEARING PLATES TO THE BENT CAP AT BEAM LOCATIONS AS NEEDED TO ADJUST FOR CROSS-SLOPE. PLATE DIMENSIONS SHALL BE 8" x (FLANGE WIDTH + 2") x (THICKNESS REQUIRED). BEARING PLATE WELDS SHALL BE 5/16" FILLET WELD, ALL SIDES, WITH 3/8" TERMINATIONS.
   THE 2009 LRFD COUNTY BRIDGE STANDARDS CB26..32-C..I-SKO..30-RB-BRACING - ROLLED BEAM BRACING DETAILS FOR PLACEMENT OF DECK SLAB CONCRETE, AND CB26..32-C..I-SKO..30-GRAU-BC - GUARD RAIL ANCHOR UNIT - BRIDGE CONNECTION, WILL ALSO BE REQUIRED.

GENERAL NOTES

- STAY-IN-PLACE STEEL DECK FORMS MAY BE USED IF THE MINIMUM DECK SLAB THICKNESS OF 8" IS OBTAINED BY MEASURING FROM THE TOP OF THE DECK SLAB TO THE TOP PORTION OF THE STEEL CORRUGATION. NO ADDITIONAL CONCRETE WEIGHT OF THE DECK SLAB IS PERMITTED. ADDITIONAL STEEL WEIGHT OF THE DECK FORMS SHALL NOT EXCEED 5 PSF. STAY-IN-PLACE PRESTRESSED CONCRETE DECK FORMS MAY BE USED IF THE FOLLOWING CONDITIONS ARE MET:
  1) SHOP DRAWINGS AND STRUCTURAL CALCULATIONS FOR THE FORMS ARE SUBMITTED TO THE BRIDGE ENGINEER FOR APPROVAL.
  2) A NEW STRUCTURAL DESIGN, STRUCTURAL CALCULATIONS, AND A NEW REINFORCING SCHEDULE FOR THE DECK SLAB ARE SUBMITTED TO THE BRIDGE ENGINEER FOR APPROVAL.
  3) SHOP DRAWINGS, NEW DECK SLAB REINFORCING SCHEDULE AND STRUCTURAL DESIGNS AND CALCULATIONS SHALL BE PREPARED BY AND SEALED BY A PROFESSIONAL ENGINEER REGISTERED IN THE STATE OF OKLAHOMA.

  ALL COSTS ASSOCIATED WITH THE USE OF STAY-IN-PLACE FORMS, INCLUDING ALL PROFESSIONAL SERVICES, MATERIAL, LABOR, EQUIPMENT AND INCIDENTALS, SHALL BE AT THE CONTRACTOR'S EXPENSE. FOR ADDITIONAL INFORMATION CONCERNING THE USE OF STAY-IN-PLACE FORMS, SEE SECTION 502 OF THE STANDARD SPECIFICATIONS.

- DO NOT SAW-CUT GROOVE OR TINE THE DECK SLAB WITHIN 6" OF ANY CONSTRUCTION JOINT.

APPROVED BY BRIDGE ENGINEER *Robert J. Rusch* DATE *4-27-2012*

OKLAHOMA DEPARTMENT OF TRANSPORTATION
COUNTY BRIDGE STANDARDS (ENGLISH)

TYPICAL CROSS SECTION
ROLLED BEAMS
26' CLEAR ROADWAY, 0° SKEW

2009 SPECIFICATIONS	CB26-XTBM-SKO-XSECT	OOE
		CB-975E

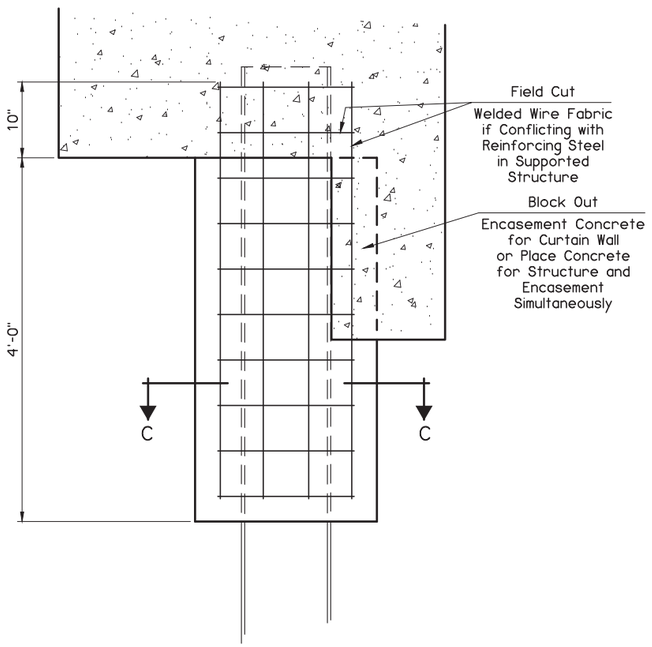

ELEVATION AT CURTAIN WALL

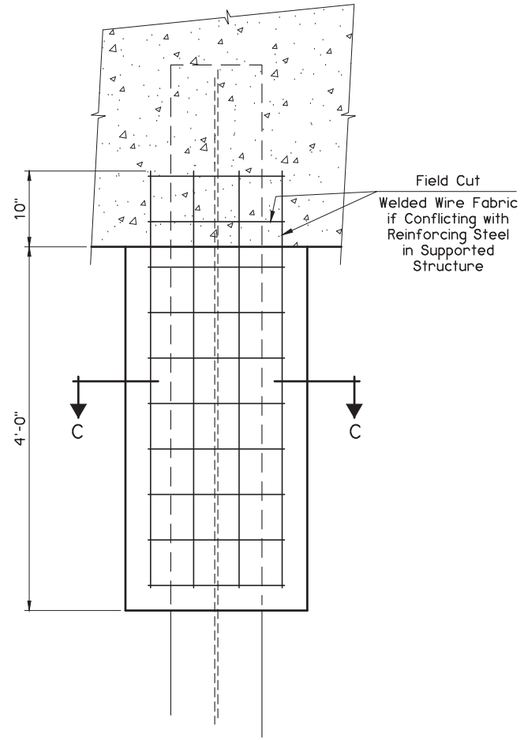

TYPICAL ELEVATION

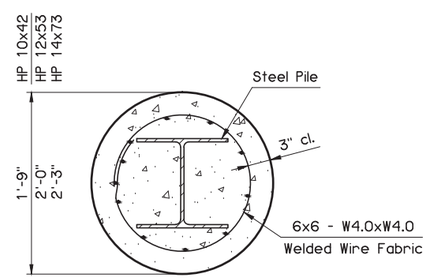

SECTION C-C

DETAIL OF STEEL PILE ENCASEMENT

NOTE:
Forms for Encasements may be omitted when soil conditions permit. Use only when specified in the plans. The Department considers the cost of Excavation, Forms, Class A Concrete and Welded Wire Fabric Reinforcing Steel for Steel Pile Encasements to be included in the contract unit price of PILES, DRIVEN.

PILE ENCASEMENT QUANTITIES PER PILE				
ITEM	UNIT	HP 10x42	HP 12x53	HP 14x73
CLASS A CONCRETE	C.Y.	0.34	0.45	0.57
REINFORCING STEEL	LB.	16.2	18.3	20.3

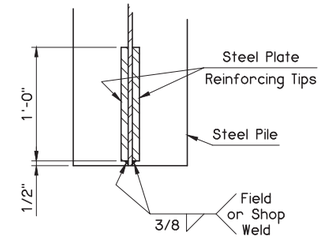

SECTION A-A

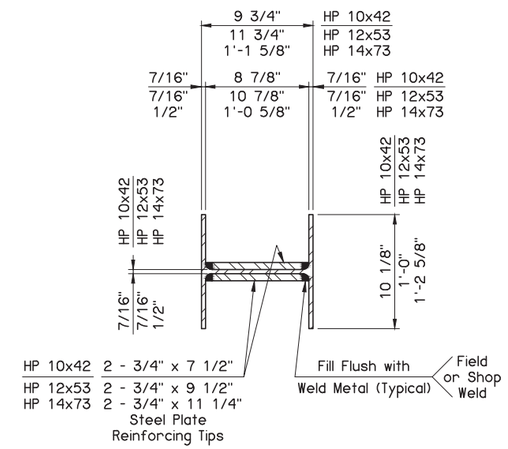

SECTION B-B

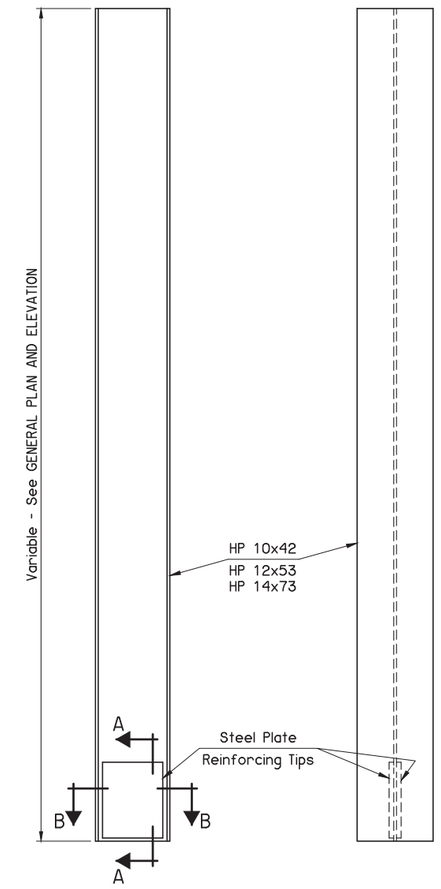

ELEVATION OF WEB

ELEVATION OF FLANGE

DETAIL OF PILING

NOTE:
Provide structural steel for Piling and Steel Plate Reinforcing Tips in accordance with AASHTO M270 (ASTM A572), Grade 50. Provide Steel Plate Reinforcing Tips for all Piling unless specifically deleted by notes in the Project Plans and Specifications.
The Contractor may use Manufactured Driving Tips as an alternative to the Steel Plate Reinforcing Tips shown with approval by the Bridge Engineer. The Department considers the cost of Steel Plate Reinforcing Tips or Manufactured Driving Tips to be included in the contract unit price of PILES, FURNISHED.

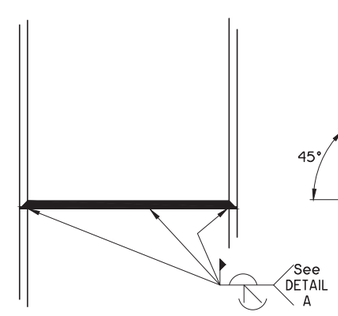

DETAIL OF WELDED SPLICE

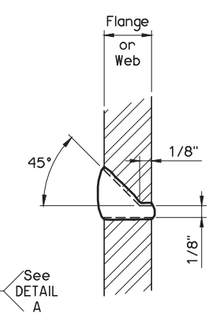

DETAIL A

NOTE:
The Contractor may use an ODOT approved Manufactured Pile Splice as an alternative to the Welded Splice shown.

APPROVED BY BRIDGE ENGINEER DATE 12-20-16

OKLAHOMA DEPT. OF TRANSPORTATION
BRIDGE STANDARD (ENGLISH)

STEEL PILING

2009 SPECIFICATIONS	HP1-2	01E

B-11E

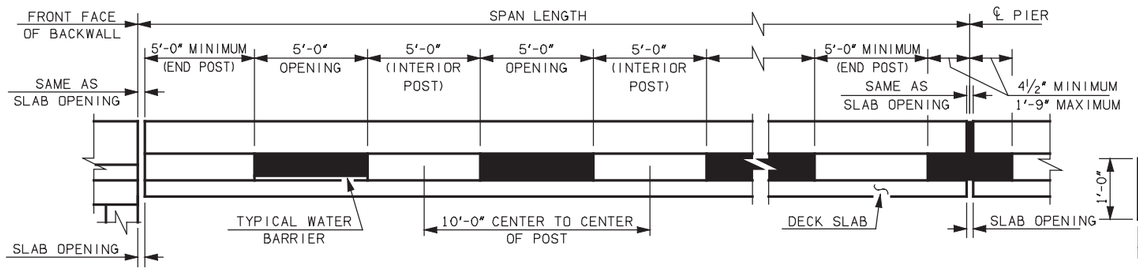

AT EXPANSION ABUTMENTS

AT EXPANSION PIERS

ELEVATION OF RAIL WITH EXPANSION JOINTS

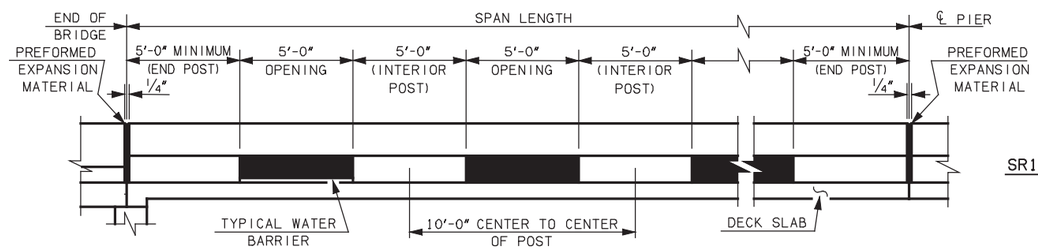

AT FIXED ABUTMENTS

AT FIXED PIERS

ELEVATION OF RAIL WITH FIXED JOINTS

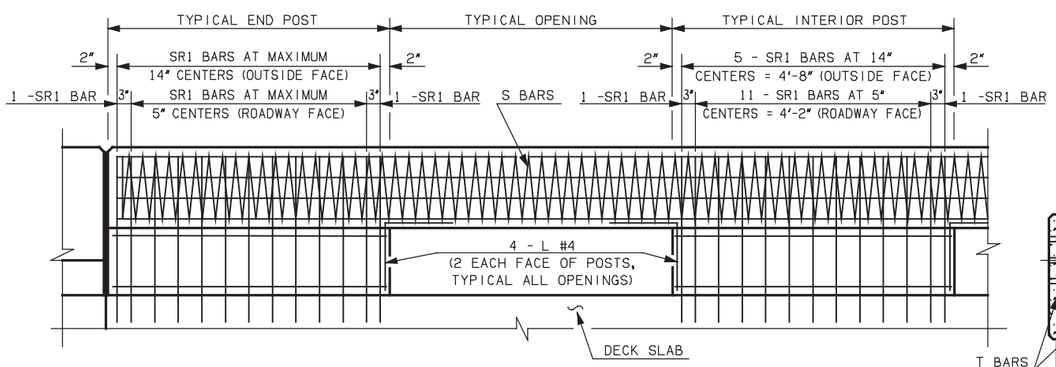

TRAFFIC RAIL REINFORCING

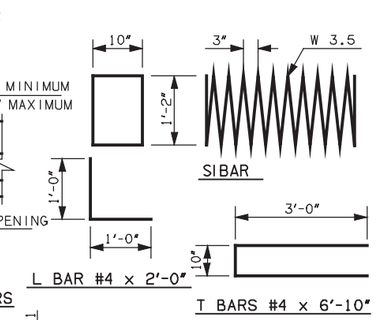

L BAR #4 x 2'-0"

T BARS #4 x 6'-10"

SR1 BARS #5 x 3'-10"

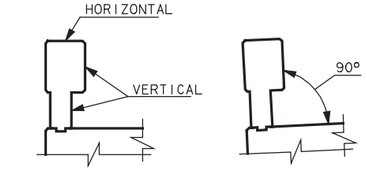

NORMAL CROWN OR CROSS SLOPE

SUPERELEVATED

NOTE:
WHERE ROADWAY SURFACE TRANSITIONS FROM NORMAL CROWN SLOPE TO FULL SUPERELEVATION, UNIFORMLY VARY THE ANGLE FORMED BY THE FACE OF THE RAILING AND THE ROADWAY BETWEEN THE LIMITS SHOWN ABOVE.

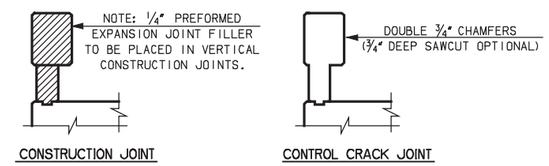

CONSTRUCTION JOINT

CONTROL CRACK JOINT

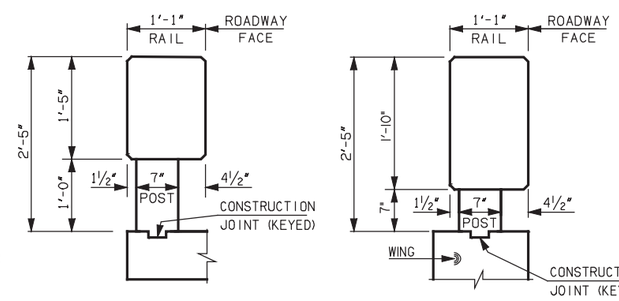

TRAFFIC RAIL DETAIL

TRAFFIC RAIL DETAIL AT WING

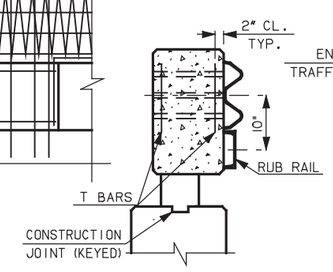

SECTION "A-A"

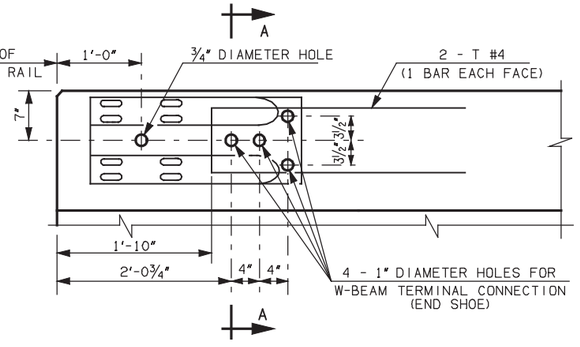

DETAIL "A"

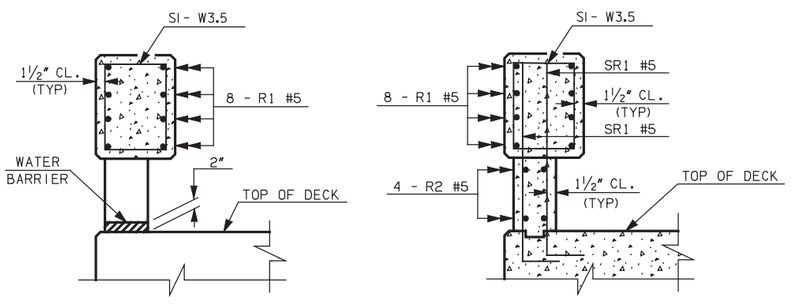

SECTION THRU POST OPENING

SECTION THRU POST

SECTION THRU RAIL AT BRIDGE DECK OR APPROACH SLAB

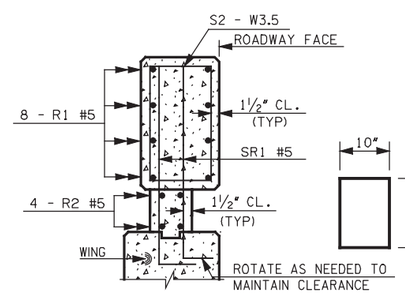

TRAFFIC RAIL SECTION AT WING

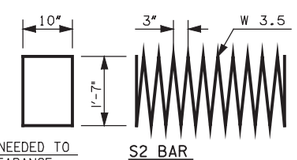

S2 BAR

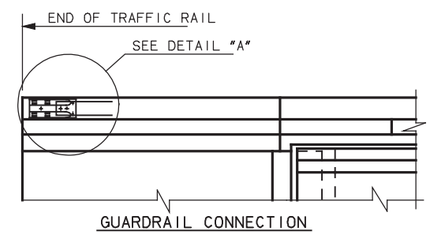

GUARDRAIL CONNECTION

DESCRIPTION	REVISIONS	DATE

CONCRETE RAIL (TR3) NOTES

CONSTRUCT THE CONCRETE RAIL (TR3) TO MEET THE REQUIREMENTS OF THE STANDARD SPECIFICATIONS FOR HIGHWAY CONSTRUCTION (ENGLISH) AS WELL AS THE FOLLOWING REQUIREMENTS:

S-BARS (SPIRAL BARS):
WHEN TWO OR MORE S-BARS ARE USED IN A CONTINUOUS RAIL SECTION, BUTT THEIR ENDS TOGETHER WITHIN THE CENTER 3'-0" OF A RAIL POST. S-BARS ARE NOT TO BE EPOXY COATED.

CLASS AA CONCRETE:
CLASS AA CONCRETE SHALL BE USED IN THE CONCRETE RAIL (TR3). ALL COSTS OF CONCRETE TO BE INCLUDED IN THE PRICE BID PER LINEAR FOOT OF "CONCRETE RAIL (TR3)".

SR-BARS (VERTICAL POST BARS):
PLACE AND TIE ALL SRIBARS BEFORE CONCRETE IS PLACED IN THE DECK SLAB, APPROACH SLABS, OR WINGWALLS AS APPLICABLE. ROTATE HORIZONTAL LEGS OF THE SRIBARS TO MAINTAIN CONCRETE COVER IN WINGWALL APPLICATIONS. ALL REINFORCING STEEL SHALL BE EPOXY COATED REINFORCING STEEL AND SHALL BE PAID FOR IN THE PRICE BID PER LB OF "EPOXY COATED REINFORCING STEEL".

WATER BARRIER:
WATER BARRIERS, AS DETAILED, SHALL BE PROVIDED AT RAIL OPENINGS THAT DRAIN ONTO UNDERCROSSING ROADWAYS AND SIDEWALKS AS SHOWN IN THE PLANS AND AT OTHER LOCATIONS AS DIRECTED BY THE ENGINEER. PLACE THE CONCRETE FOR THE WATER BARRIER CONCURRENTLY WITH THE PLACEMENT OF THE CONCRETE IN THE POSTS. INCLUDE THE COST OF WATER BARRIERS IN THE PRICE BID FOR "CONCRETE RAIL (TR3)".

CONCRETE RAIL CONSTRUCTION:
CONSTRUCT RAILING WITHIN THE GUIDELINES AS SHOWN IN THE PLACEMENT DETAILS. LAYOUT THE POSTS AS SHOWN IN THE DETAILS ON THIS SHEET UNLESS OTHERWISE SHOWN IN THE PLANS. CONSTRUCT THE OPENINGS SUCH THAT THE END FACE OF THE POST IS PERPENDICULAR TO THE ROADWAY PROFILE GRADE. FOR RAILS ON A HORIZONTAL CURVE, CONSTRUCT THE RAIL TO THE REQUIRED RADIUS.

CONSTRUCTION JOINTS:
PLACE A CONSTRUCTION JOINT AT EACH FIXED ABUTMENT AND FIXED PIER, AND AT OTHER LOCATIONS AS SHOWN IN THE PLANS. PLACE 1/4" THICK PREFORMED EXPANSION MATERIAL IN THE CONSTRUCTION JOINT, SUCH THAT IT COVERS THE ENTIRE AREA OF THE RAIL AND POST IN ACCORDANCE WITH THE DETAILS SHOWN.

EXPANSION JOINTS:
AT EXPANSION JOINTS IN THE DECKSLAB OR APPROACH SLAB, MATCH THE WIDTH OF THE OPENING BETWEEN THE ENDS OF THE RAILING WITH THE OPENING OF THE EXPANSION JOINT. CONSTRUCT THE OPENING BETWEEN THE END POST AND THE EXPANSION JOINT AS SHOWN ON THE PLANS WITHIN THE MAXIMUM AND MINIMUM DIMENSIONS AS SHOWN ON THIS SHEET.

CONTROL CRACK JOINTS:
WHEN PLANS CALL FOR A CONTROL CRACK JOINT PROVIDE DOUBLE 3/4" CHAMFERS OR 3/4" DEEP SAWCUT IN ACCORDANCE WITH THE DETAILS SHOWN. ALL BARS SHALL BE CONTINUOUS THROUGH THE CONTROL CRACK JOINTS.

GUARDRAIL CONNECTION:
FORM OR DRILL HOLES, AS SHOWN, FOR THE CONNECTION OF GUARDRAIL BRIDGE CONNECTION AT THE LOCATIONS SHOWN IN THE PLANS OR AS DIRECTED BY THE ENGINEER. IT IS THE RESPONSIBILITY OF THE BRIDGE CONTRACTOR TO PROVIDE THE HOLES. THE CONTRACTOR THAT INSTALLS THE GUARDRAIL WILL BE RESPONSIBLE FOR INSTALLING THE GUARDRAIL BRIDGE CONNECTIONS. INCLUDE THE COST OF "T" BARS IN THE PRICE BID FOR "CONCRETE RAIL (TR3)".

BASIS OF PAYMENT	
DESCRIPTION	UNIT
CONCRETE RAIL (TR3)	L.F.

APPROVED BY BRIDGE ENGINEER: [signature] DATE: 6/7/13

OKLAHOMA DEPT. OF TRANSPORTATION
BRIDGE STANDARD (ENGLISH)

CONCRETE RAIL (TR3)

2009 SPECIFICATIONS | TR3-2 | OIE B-01E